Indian®
MOTORCYCLE

Scout® Bobber
Scout® Bobber Twenty
Scout® Bobber Sixty

2020 RIDER'S MANUAL

WARNING

Read, understand, and follow all of the instructions and safety precautions in this manual and on all product labels.

Failure to follow the safety precautions could result in serious injury or death.

WARNING

Operating, servicing, and maintaining a passenger vehicle or off-road vehicle can expose you to chemicals including engine exhaust, carbon monoxide, phthalates, and lead, which are known to the State of California to cause cancer and birth defects or other reproductive harm. To minimize exposure, avoid breathing exhaust, do not idle the engine except as necessary, service your vehicle in a well-ventilated area and wear gloves or wash your hands frequently when servicing your vehicle.

For more information go to www.P65Warnings.ca.gov/passenger-vehicle.

Indian®
MOTORCYCLE

2020 Rider's Manual

Indian® Scout® Bobber
Indian® Scout® Bobber Twenty
Indian® Scout® Bobber Sixty

Copyright 2020 Indian Motorcycle International, LLC

All information contained within this publication is based on the latest product information available at the time of publication. Product improvements or other changes may result in differences between this manual and the motorcycle. Depictions and/or procedures in this publication are intended for reference use only.

No liability can be accepted for omissions or inaccuracies. INDIAN MOTORCYCLE reserves the right to make changes at any time, without notice and without incurring obligation to make the same or similar changes to motorcycles previously built. Any reprinting or reuse of the depictions and/or procedures contained within, whether whole or in part, is expressly prohibited.

Unless noted, trademarks are the property of Indian Motorcycle International, LLC

AXALTA® is a registered trademark of Axalta Coating Systems IP co.

9931167 Rev 02

Congratulations on your purchase of a new INDIAN MOTORCYCLE. You have joined an elite family of motorcycle riders who have acquired a celebrated piece of American history by choosing to own an INDIAN MOTORCYCLE.

Your new motorcycle is the end result of true dedication and craftsmanship by our engineering, design and assembly teams. It was designed and manufactured to meet our goal of providing you with a high quality motorcycle that you can ride trouble-free for many years to come. We hope you will take as much pride in riding your new motorcycle as our team did in building it for you.

We urge you to read this rider's manual thoroughly. It contains information essential to safe riding and proper maintenance of your motorcycle.

Your authorized INDIAN MOTORCYCLE dealer knows your motorcycle best and should be consulted for service and assistance. Skilled technicians using advanced equipment and methods are best qualified to perform all major repairs and service your motorcycle may require.

INDIAN MOTORCYCLE complies with all federal, state and local safety and emission regulations for the area of intended sale.

SAFETY SYMBOLS AND SIGNAL WORDS

The following signal words and symbols appear throughout this manual. Your safety and the safety of others is involved when these words and symbols are used. Become familiar with their meanings before reading the manual.

⚠ DANGER

DANGER indicates a hazardous situation which, if not avoided, WILL result in death or serious injury.

⚠ WARNING

WARNING indicates a hazardous situation that, if not avoided, **may** result in death to the operator, bystanders or person(s) inspecting or servicing the vehicle.

⚠ CAUTION

SAFETY ALERT CAUTION indicates a potential hazard that may result in minor personal injury or damage to the vehicle.

IMPORTANT

IMPORTANT provides key reminders during disassembly, assembly, and inspection of components.

Introduction 7
Safety 9
Component Identification 21
Features and Controls 29
Pre-Ride Inspections 49
Operation 59
Maintenance 71
Cleaning and Storage 123
Specifications 129
Warranty 137
Maintenance Log 151

INTRODUCTION

IDENTIFICATION NUMBER RECORD

RECORD IMPORTANT IDENTIFICATION NUMBERS BELOW.	
Vehicle Identification Number (VIN) (see page 19)	
Engine Identification Number (see page 27)	
Ignition Key Number (see page 27)	

SERVICE AND WARRANTY INFORMATION

Some procedures are beyond the scope of this manual. See your dealer to purchase an *INDIAN MOTORCYCLE Service Manual*. Some procedures provided in the service manual require specialized knowledge, equipment, and training. Be sure you have the required technical skills and tools that are needed before you attempt ANY service on your motorcycle. Please contact your authorized dealer before attempting any service work that is beyond your level of technical knowledge or experience, or if the work requires specialized equipment.

SAFETY

ABOUT THE RIDER'S MANUAL

⚠ WARNING

Failure to follow all recommended precautions and procedures could result in serious injury or death. Always heed all safety precautions and follow all operation, inspection and maintenance procedures outlined in this manual.

All references to RIGHT, LEFT, FRONT or REAR are from the operator's perspective when seated in a normal riding position. If you have questions about the operation or maintenance of your motorcycle after you've read this manual, please see your authorized dealer. To locate the nearest authorized INDIAN MOTORCYCLE dealer, visit the INDIAN MOTORCYCLE web site at ***www.indianmotorcycle.com***.

Carefully read and understand the information found in the *Safety* section beginning on this page. To keep your motorcycle in peak condition on the road or in storage, understand and follow the procedures outlined in the *Maintenance* section beginning on page 71.

Bring the manual along when you ride. Following the precautions and procedures in the manual will add to your enjoyment and help keep you safe. If you lose or damage this manual, please purchase a new one through any authorized INDIAN MOTORCYCLE dealer. This rider's manual should be considered part of the motorcycle and should remain with the motorcycle when ownership changes.

SAFE RIDING PRACTICES

⚠ WARNING

Improper use of this motorcycle can result in serious injury or death. To minimize the risk, read and understand the information contained in this section before operating the motorcycle. This section contains safety information specific to the INDIAN MOTORCYCLE, as well as information about general motorcycle safety. Anyone who rides the motorcycle (operators and passengers) must follow these safety precautions.

MOTORCYCLING HAS INHERENT RISKS

You can minimize those risks, but you can't eliminate them completely. Even if you're an experienced motorcycle operator or passenger, read all of the safety information in this manual before operating the motorcycle.

- Take a rider education course from a qualified instructor. The course will help you develop or refresh your expertise in safe riding habits through instruction and riding.
- Read and understand all information in this rider's manual.
- Observe all maintenance requirements specified in this manual. See the *INDIAN MOTORCYCLE Service Manual* or an authorized INDIAN MOTORCYCLE dealer.

DESIGN CHARACTERISTICS AFFECT HOW YOU SHOULD RIDE THE MOTORCYCLE

- The motorcycle is designed for on-road use with one rider (and one passenger if the motorcycle is equipped with a passenger seat and pegs). *Never exceed the GVWR or the GAWR*. Refer to the *Specifications* chapter or the Manufacturing Information/VIN label on the motorcycle frame for model-specific information.
- Riding off-road, riding with more than one passenger, or carrying weight exceeding the maximum weight rating can make handling difficult, which could cause loss of control.
- During the first 500 miles (800 km) of operation, follow all break-in procedures as outlined on page 59. Failure to do so can result in serious engine damage.
- If your motorcycle is equipped with saddlebags, a windshield or a passenger backrest, be prepared to reduce operating speed to maintain stability.

FOLLOW THESE GENERAL SAFE RIDING PRACTICES

- Before each ride, perform the pre-ride inspections. Failure to do so may result in damage to the motorcycle or an accident.
- Until you're thoroughly familiar with the motorcycle and all of its controls, practice riding where there is little or no traffic. Practice riding at a moderate speed on various road surfaces and in different weather conditions.
- Know your skills and limits, and ride within them.
- Allow only licensed, experienced operators to ride your motorcycle, and then only after they have become familiar with its controls and operation. Make sure all riders read and understand this rider's manual before riding.
- Do not ride when you're fatigued, ill or under the influence of alcohol, prescription drugs, over-the-counter drugs or any other drugs. Fatigue, illness, alcohol and drugs can cause drowsiness, loss of coordination and loss of balance. They can also affect your awareness and judgment.
- If your motorcycle operates abnormally, correct the problem immediately. See the *INDIAN MOTORCYCLE Service Manual* or an authorized INDIAN MOTORCYCLE dealer or other qualified dealer.
- Ride defensively, as if you are invisible to other motorists, even in broad daylight. *A motorist's failure to see or recognize a motorcycle is the leading cause of automobile/motorcycle accidents*. Ride where you're clearly visible to other motorists, and observe their behavior carefully.
- Be especially cautious at intersections, as these are the most likely places for an accident.
- To prevent loss of control, keep your hands on the handlebars and your feet on the footrests.
- Be aware that a highway bar is not designed to protect the rider from injury in a collision.
- Obey the speed limit and adjust your speed and riding technique based on road, weather and traffic conditions. As you travel faster, the influence of all other conditions increases, which can affect the motorcycle's stability and increase the possibility of losing control.

- Do not move or operate the motorcycle with the steering locked (if equipped), as the severely restricted steering could result in loss of control.
- Reduce speed when:
  - The road has potholes or is otherwise rough or uneven.
  - The road contains sand, dirt, gravel or other loose substances.
  - The road is wet, icy or oily.
  - The road contains painted surfaces, manhole covers, metal grating, railway crossings or other slippery surfaces.
  - The weather is windy, rainy or otherwise causing slippery or rapidly changing conditions.
  - Traffic is heavy, congested, not allowing sufficient space between vehicles or otherwise not flowing smoothly.
  - You are being passed in either direction by a large vehicle that may produce a wind blast in its wake.
- When approaching a curve, choose a speed and lean angle that allows you to pass through the curve in your own lane without applying the brakes. Excessive speed, improper lean angle or braking in a curve can cause loss of control.
- Ground clearance is reduced when the motorcycle leans. Do not allow components to contact the road surface when leaning the motorcycle in a curve, as this could cause loss of control.
- Do not tow a trailer. Towing a trailer can make the motorcycle hard to handle.
- Retract the sidestand fully before riding. If the sidestand is not fully retracted, it could contact the road surface and cause loss of control.
- To maximize braking effectiveness, *use the front and rear brakes together.* Be aware of the following braking facts and practices:
  - The rear brake provides 40% of the motorcycle's stopping power, at most. Use the front and rear brakes together.
  - To avoid skidding, apply the brakes gradually when the road is wet or rough, or contains loose or other slippery substances.
  - If possible, avoid applying the brakes while making a turn. Motorcycle tires have less traction during turns, so braking will increase the possibility of skidding. Bring the motorcycle to the upright position before applying the brakes.
  - With new pads and rotors, allow up to 250 miles (500 km) of operation in urban driving conditions (not highway cruising) to allow pads to mate with new rotors. Brakes should be used frequently. During this time brake performance will be less effective. Avoid using brakes harshly unless in an emergency. Brake efficiency will gradually increase during this seating period.

PROTECTIVE APPAREL

IMPORTANT
Wear protective apparel to decrease the risk of injury and increase riding comfort.

- Always wear a helmet that meets or exceeds established safety standards. Approved helmets in the USA and Canada bear a U.S. Department of Transportation (DOT) label. Approved helmets in Europe, Asia and Oceania bear the ECE 22.05 label. The ECE mark consists of a circle surrounding the letter E, followed by the distinguishing number of the country which has granted approval. The approval number and serial number will also be displayed on the label. Laws in some areas *require* that you wear an approved helmet. Head injuries are the leading cause of fatalities in accidents involving motorcycles. Statistics prove that an approved helmet is the most effective protection in preventing or reducing head injuries. The helmet should fit snugly, be securely fastened, have no obvious defects, and have not previously been involved in an accident/crash.
- Wear eye protection to protect eyes from wind or airborne particles and objects. Wearing a face shield can help protect your face in an accident/crash and protect face from wind or airborne particles or objects. Laws in some areas *require* that you wear eye protection. We recommend that you wear approved Personal Protective Equipment (PPE) bearing markings such as VESC 8, V-8, Z87.1, or CE. Make sure protective eyewear is kept clean.
- All riders should wear bright or light-colored and/or reflective clothing to improve visibility to other motorists. *A motorist's failure to see or recognize a motorcycle is the leading cause of automobile/motorcycle accidents.*
- Wear gloves, a jacket, heavy boots and long pants to prevent or reduce injury from abrasions, lacerations or burns should the motorcycle fall. Wear boots with low heels, as high heels can catch on pedals or footrests. The combination of boots and pants should completely cover legs, ankles and feet, protecting skin from engine and exhaust system heat.
- Do not wear loose, flowing clothing or long boot laces, as they can catch on handlebars, levers or footrests, or they can become entangled in the wheels, causing loss of control and serious injury.

ANTI-LOCK BRAKE SYSTEM RESPONSE (IF EQUIPPED)

When the anti-lock brakes engage during a braking event, the rider will feel pulsing at the brake levers. *Continue to apply steady pressure to the brakes for the best stopping performance.*

CARRYING A PASSENGER

⚠ WARNING

Do not carry a passenger unless the motorcycle is equipped with passenger seat and passenger footrests.

- Do not exceed the gross vehicle weight rating (GVWR) for your motorcycle. Refer to the *Specifications* section of this manual or the Manufacturing Information/VIN label on the motorcycle frame for model-specific information.
- Adjust ride height as needed. See the *Rear Shock Preload (Ride Height) Inspection* and *Rear Shock Preload (Ride Height) Adjustment* sections for details.
- Direct the passenger to hold onto you or to the passenger hand strap with both hands and to keep both feet on the passenger footrests. Do not carry a passenger who cannot place both feet firmly on the passenger footrests. A passenger who is not holding on properly, or who cannot reach the passenger footrests, can shift their body erratically, which can make the motorcycle hard to handle and cause loss of control.
- Before riding, be sure your passenger knows safe riding procedures. Discuss any safety information unfamiliar to your passenger. A passenger who is unaware of safe riding procedures may distract you or make movements that make the motorcycle hard to handle.
- Adjust your riding style to compensate for the differences in handling, acceleration and braking caused by the additional weight of the passenger. Failure to do so can cause loss of control.
- For riding comfort and to ensure proper ground clearance, adjust rear shock preload.

USE OF ACCESSORIES

Because INDIAN MOTORCYCLE cannot test and make specific recommendations concerning every accessory or combination of accessories sold, the operator is responsible for determining that the motorcycle can be safely operated with any accessories or additional weight. Use the following guidelines when choosing and installing accessories:

- Do not install accessories that impair operator visibility or the stability, handling or operation of the motorcycle. Before installing an accessory, be sure that it does not:
  - reduce ground clearance when the motorcycle is either leaned or in a vertical position;
  - limit suspension or steering travel or your ability to operate controls;
  - displace you from your normal riding position;
  - obscure lights or reflectors.
- Bulky, heavy or large accessories can cause instability (due to the lifting or buffeting effects of wind) and loss of control.

- Do not install electrical accessories that exceed the capacity of the motorcycle's electrical system. Never install higher wattage light bulbs than those supplied as original equipment. An electrical failure could result and cause hazardous loss of engine power or lights, or damage to the electrical system. See the Electrical Precautions section for details.
- Use only genuine INDIAN MOTORCYCLE accessories designed for your model.
- Do not exceed the GROSS VEHICLE WEIGHT RATING (GVWR) or the GROSS AXLE WEIGHT RATING (GAWR) for your motorcycle.

MODIFICATIONS

Modifying the motorcycle by removing any equipment or by adding equipment not approved by the manufacturer may void your warranty. Some modifications may not be legal in your area of operation. If in doubt, contact your authorized INDIAN MOTORCYCLE dealer.

⚠ CAUTION

Modifications could make the motorcycle unsafe to ride and could result in serious injury to operator or passenger, as well as damage to the motorcycle.

PARKING THE MOTORCYCLE

When leaving the motorcycle unattended, turn the engine off. If your motorcycle is equipped with a keyed ignition, remove the ignition key to prevent unauthorized use.

Park the motorcycle where people are not likely to touch the hot engine or exhaust system or place combustible materials near these hot areas. Do not park near a flammable source such as a kerosene heater or an open flame, where hot components could ignite combustible materials.

Park the motorcycle on a firm, level surface. Sloped or soft surfaces may not support the motorcycle. If you must park on a slope or soft surface, follow the precautions outlined on page 68.

SADDLEBAG

Whenever operating with a saddlebag or while carrying cargo:

- Never ride at excessive speeds. Saddlebags and cargo, combined with the lifting or buffeting effects of wind, can make the motorcycle unstable and cause loss of control.
- Do not exceed the individual weight limit of the saddlebag.
- NEVER EXCEED GROSS VEHICLE WEIGHT RATING (GVWR) or the GROSS AXLE WEIGHT RATING (GAWR), regardless of whether or not the saddlebag is loaded to capacity. Exceeding the weight rating can reduce stability and handling and cause loss of control.

CARRYING CARGO

Use the following guidelines when attaching cargo or accessories to the motorcycle. Where applicable, these guidelines also refer to the contents of any accessories.

- Keep cargo and accessory weight to a minimum, and keep items as close to the motorcycle as possible to minimize a change in the motorcycle's center of gravity. Changing the center of gravity can cause loss of stability and handling and could cause loss of control.
- Do not exceed the GROSS VEHICLE WEIGHT RATING (GVWR) or the GROSS AXLE WEIGHT RATING (GAWR) for your motorcycle.
- Distribute weight evenly on both sides of the motorcycle. Maintain even weight distribution by checking accessories and cargo to make sure they're securely attached to the motorcycle before riding and whenever you take a break from riding. Uneven weight distribution or sudden shifting of accessories or cargo while you're riding may cause difficult handling, loss of control and driving hazards for other motorists (if cargo falls from the motorcycle).
- For riding comfort and to ensure proper ground clearance, adjust rear shock preload. See the Rear Shock Preload (Ride Height) Inspection section for details.
- Do not attach large or heavy cargo such as sleeping bags, duffle bags or tents to the handlebars, front fork area or front fender. Cargo or accessories placed in these areas can cause instability (due to improper weight distribution or aerodynamic changes) and could cause loss of control.
- Do not exceed the maximum cargo weight limit of any accessory (see accessory instructions and labels). Do not attach cargo to an accessory not designed for that purpose. Either circumstance could result in an accessory failure that could cause loss of control.
- Always obey posted speed limits.
- Do not attach anything to the motorcycle unless specifically designed for that purpose by INDIAN MOTORCYCLE.

TRANSPORTING THE MOTORCYCLE

If you must transport the motorcycle:

- Use a truck or trailer. Do not tow the motorcycle with another vehicle, as towing will impair the motorcycle's steering and handling.
- Position and restrain the motorcycle in an upright position.
- Do not restrain the motorcycle using the handlebars.
- Loop tiedown straps (from the front) up and over the lower triple clamp, using care to not interfere with wiring and brake lines. Place tiedowns as wide apart as possible on the truck or trailer bed for best stability.
- Do not engage the side stand during truck or trailer transportation.

FUEL AND EXHAUST SAFETY

Always heed these fuel safety warnings when refueling or servicing the fuel system.

⚠ WARNING

Gasoline is highly flammable and explosive under certain conditions.

- Always exercise extreme caution whenever handling gasoline.
- Always turn off the engine before refueling.
- Always refuel outdoors or in a well-ventilated area.
- Open the fuel cap slowly. Do not overfill the tank. Do not fill the tank neck.
- Do not smoke or allow open flames or sparks in or near the area where refueling is performed or where gasoline is stored.

⚠ WARNING

Gasoline and gasoline vapors are poisonous and can cause serious injury.

- Do not swallow gasoline, inhale gasoline vapors, or spill gasoline. If you swallow gasoline, inhale more than a few breaths of gasoline vapor, or get gasoline in your eyes, see a physician immediately.
- If gasoline spills on your skin or clothing, immediately wash it off with soap and water and change clothing.
- Exhaust gases contain carbon monoxide, a colorless, odorless gas that can cause loss of consciousness or death in a short time.
- Never start the engine or let it run in an enclosed area.
- Never inhale exhaust gases.

SAFETY MAINTENANCE

⚠ WARNING

Failure to perform safety maintenance as recommended can result in difficult handling and loss of control, which could result in serious injury or death. Always perform the safety maintenance procedures as recommended in this manual. Perform maintenance and repairs promptly. See the INDIAN MOTORCYCLE Service Manual or an authorized INDIAN MOTORCYCLE dealer or other qualified dealer.

- Before each ride, perform the *Pre-Ride Inspections*.
- Perform all periodic maintenance at the recommended intervals outlined in the *Periodic Maintenance* section.
- Always maintain proper tire pressure, tread condition and wheel and tire balance. Inspect tires regularly and replace worn or damaged tires promptly. Use only approved replacement tires. See the *Specifications* section.
- Always ensure proper steering head bearing adjustment. Regularly inspect the rear shock absorber and the front forks for fluid leaks or damage. Make any necessary repairs promptly. See page 90.
- Clean the motorcycle thoroughly to reveal items in need of repair.
- Always ensure all exhaust heat shields are present and in good condition.
- Fasteners must meet original specifications for quality, finish and type to ensure safety. Use only genuine INDIAN MOTORCYCLE replacement parts, and ensure that all fasteners are tightened to the proper torque.

GROSS VEHICLE WEIGHT RATING (GVWR)

⚠ WARNING

Exceeding the gross vehicle weight rating of your motorcycle can reduce stability and handling and could cause loss of control. NEVER exceed the GVWR of your motorcycle.

The *maximum load capacity* of your motorcycle is the maximum weight you may add to your motorcycle *without exceeding the GVWR*. This capacity is determined by calculating the difference between your motorcycle's GVWR and wet weight.

Refer to the *Specifications* section of this manual or the Manufacturing Information/VIN label on the motorcycle frame for model-specific information.

When determining the weight you will be adding to your motorcycle, and to ensure you do not exceed the maximum load capacity, include the following:

- Operator body weight
- Passenger body weight
- Weight of all rider's apparel and items in or on apparel

- Weight of any post-production accessories and their contents
- Weight of any additional cargo on the motorcycle

ELECTROMAGNETIC INTERFERENCE

This vehicle complies with UNECE Regulation No. 10 requirements, which is equivalent to Canadian ICES-002.

SAFETY AND INFORMATION LABELS

Labels are model-specific and market-specific. Your motorcycle may not contain all of the labels shown.

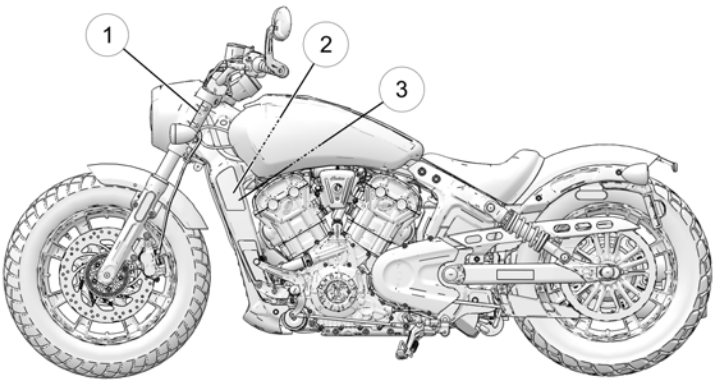

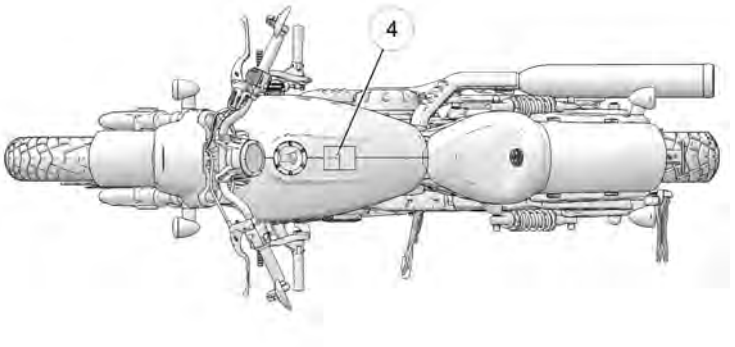

1. Vehicle Identification Number (VIN) (on side of steering head)
2. Vehicle Emission Control Information (VECI)
3. Noise Emission Control Information (NECI)
4. Operator Warning/Fuel Recommendation

COMPONENT IDENTIFICATION
SCOUT BOBBER

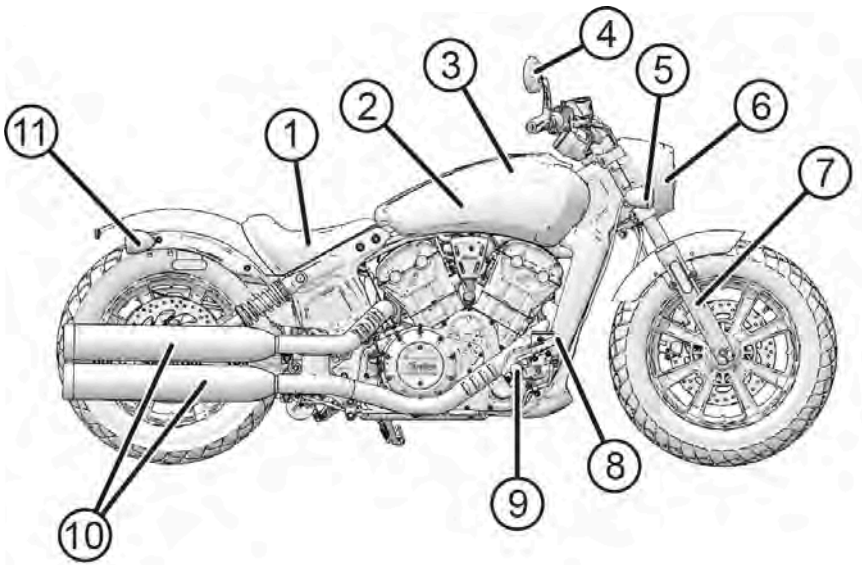

1. Driver's Seat
2. Air Box (under fuel tank)
3. Fuel Tank
4. Mirror
5. Right Front Turn Signal
6. Headlight
7. Front Fork
8. Rear Brake Pedal
9. Driver's Footrest
10. Mufflers
11. Right Rear Turn Signal / Taillight / Stop Lamp

SCOUT BOBBER

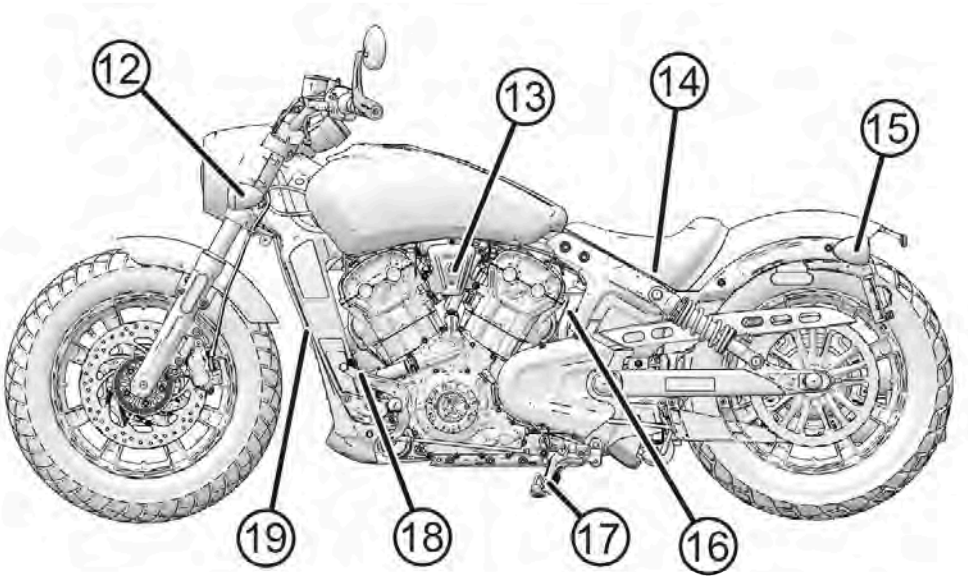

12. Left Front Turn Signal
13. Ignition Switch
14. Battery (under seat)
15. Left Rear Turn Signal / Taillight / Stop Lamp
16. Coolant Recovery Bottle
17. Sidestand
18. Gear Shifter
19. Radiator

SCOUT BOBBER TWENTY

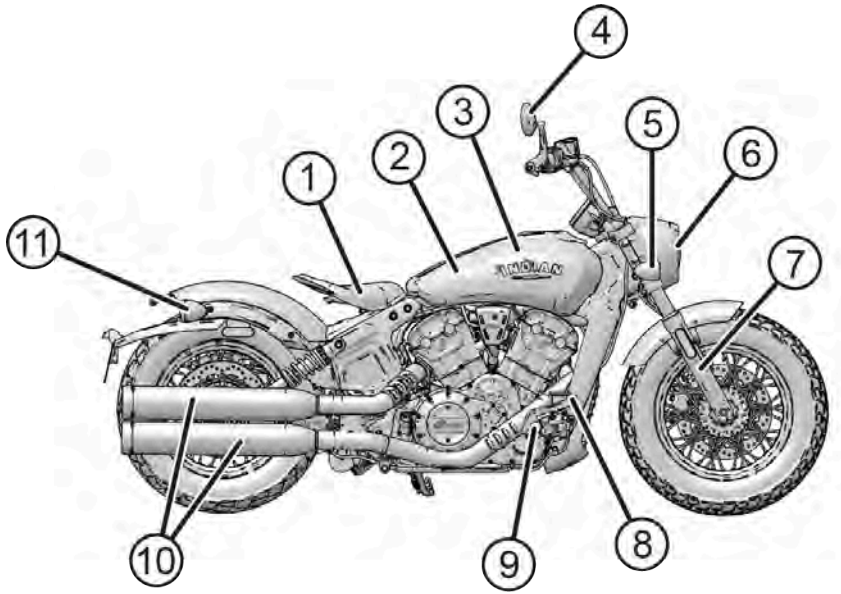

1. Driver's Seat
2. Air Box (under fuel tank)
3. Fuel Tank
4. Mirror
5. Right Front Turn Signal
6. Headlight
7. Front Fork
8. Rear Brake Pedal
9. Driver's Footrest
10. Mufflers
11. Right Rear Turn Signal / Taillight / Stop Lamp

SCOUT BOBBER TWENTY

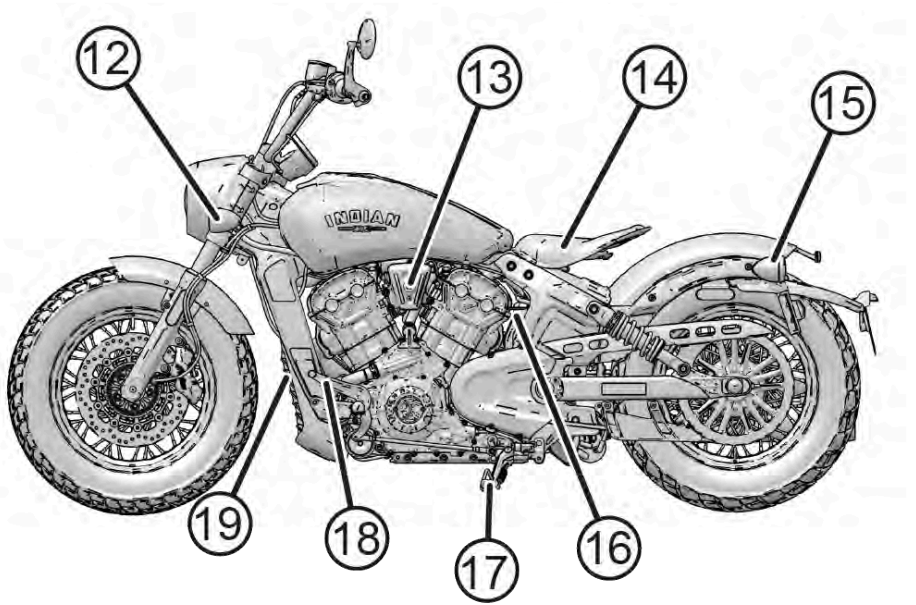

12. Left Front Turn Signal
13. Ignition Switch
14. Battery (under seat)
15. Left Rear Turn Signal / Taillight / Stop Lamp
16. Coolant Recovery Bottle
17. Sidestand
18. Gear Shifter
19. Radiator

SCOUT BOBBER SIXTY

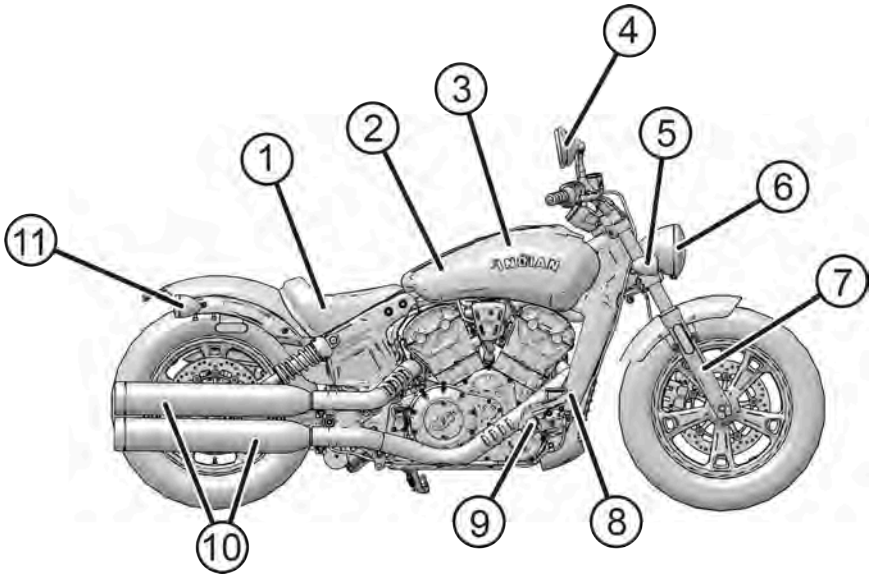

1. Driver's Seat
2. Air Box (under fuel tank)
3. Fuel Tank
4. Mirror
5. Right Front Turn Signal
6. Headlight
7. Front Fork
8. Rear Brake Pedal
9. Driver's Footrest
10. Mufflers
11. Right Rear Turn Signal / Taillight / Stop Lamp

SCOUT BOBBER SIXTY

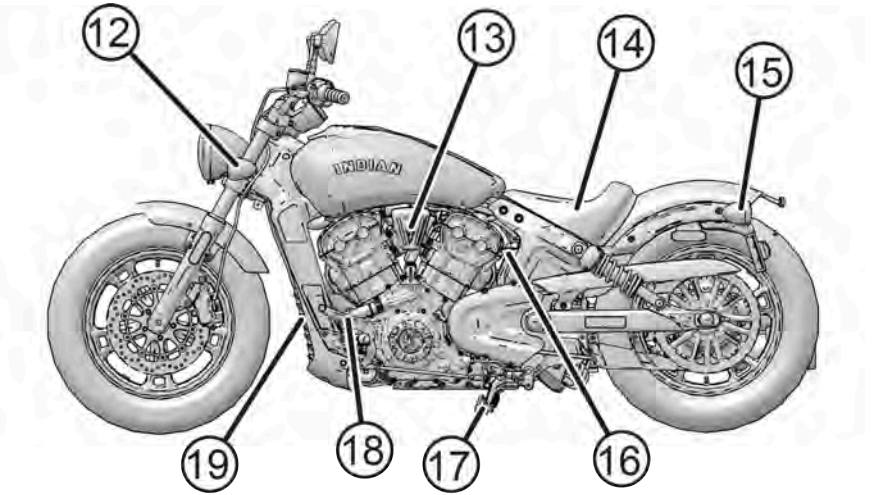

12. Left Front Turn Signal
13. Ignition Switch
14. Battery (under seat)
15. Left Rear Turn Signal / Taillight / Stop Lamp
16. Coolant Recovery Bottle
17. Sidestand
18. Gear Shifter
19. Radiator

ENGINE IDENTIFICATION NUMBER

The engine number ① is stamped into the bottom of the left crankcase near the sidestand.

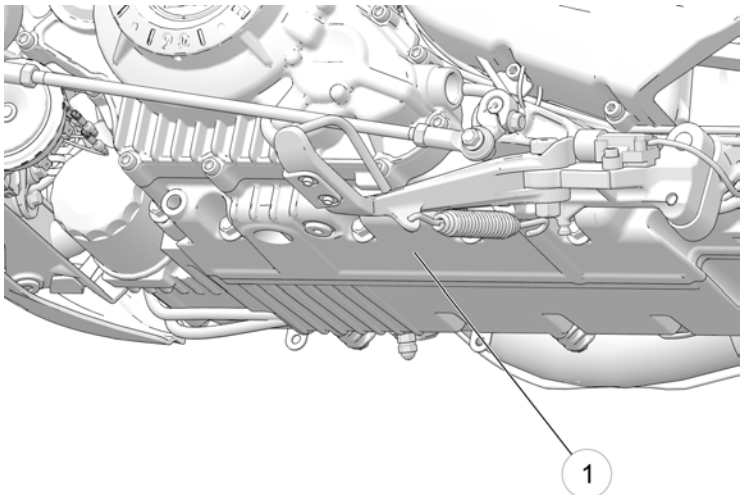

KEY IDENTIFICATION NUMBER

The key identification number ① is stamped on the metal key tag attached to the key ring. If it becomes necessary to replace the ignition key for any reason, provide the key number to your INDIAN dealer.

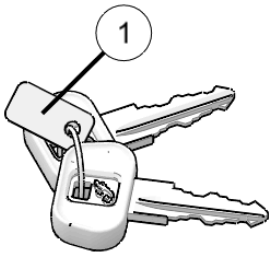

CONSOLE

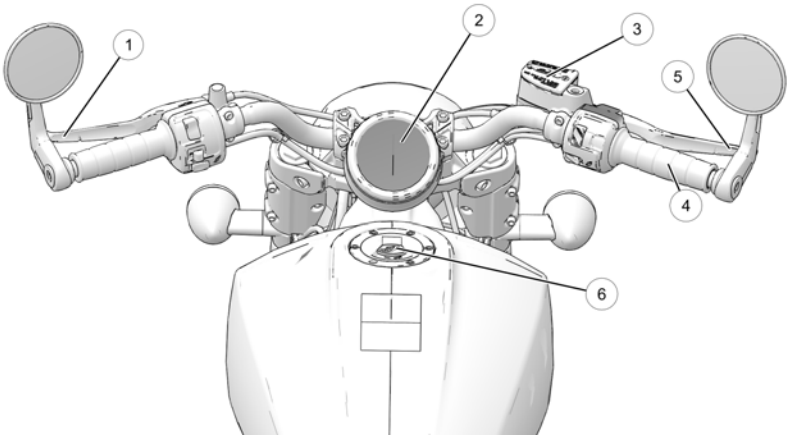

1. Clutch Lever
2. Instrument Cluster
3. Front Brake Master Cylinder
4. Throttle Control Grip
5. Front Brake Lever
6. Fuel Cap

FEATURES AND CONTROLS
SWITCH LOCATIONS

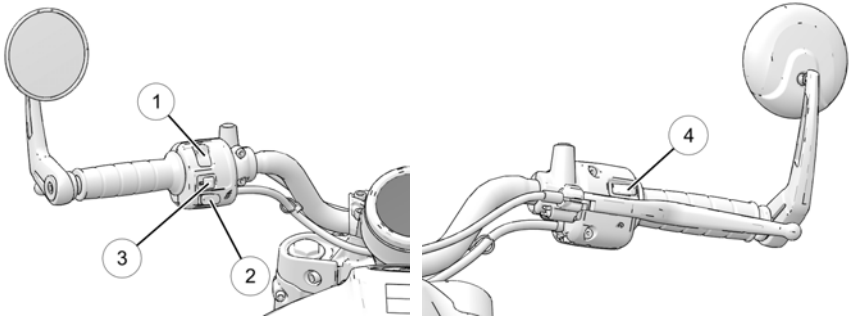

Left Control

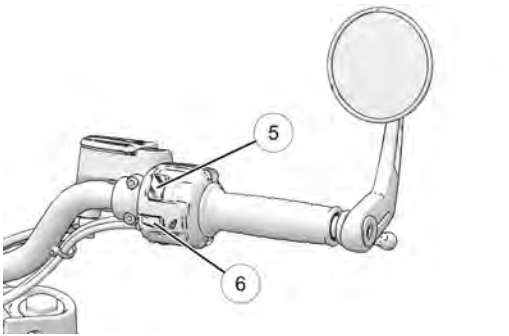

Right Control

Left Control		Right Control	
①	High/Low Light Switch	⑤	Engine Stop/Run Switch
②	Horn Switch	⑥	Engine Start Switch
③	Turn Signal Switch/Hazard Warning Flashers Switch		
④	Mode Button		

SWITCH SYMBOLS

SYMBOL	SWITCH	DESCRIPTION
	Hazard Warning Flashers Switch	The hazard warning flashers switch activates and cancels the hazard warning flashers. See the **Switch Functions** section for details.
	High/Low Headlight Beam Switch	The high/low headlight beam switch toggles the headlight between high beam and low beam. See the **Switch Functions** section for details.
	Horn Switch	To sound the horn, press the horn switch.
	Turn Signal Switch	Move the switch to the left to activate the left turn signals. Move the switch to the right to activate the right turn signals. A signal will deactivate automatically when speed or distance reach predetermined levels. To cancel a signal manually, move the switch to the center position and push it inward. Momentary Feature: Move the turn signal switch left or right and hold it in that position for at least one second. The momentary feature will activate and the signal will then cancel when the switch is released. If a bulb fails, the lamp flashes at more than twice the normal rate.
	Stop/Run Switch	Press the bottom of the switch (RUN) to allow the engine to start and run. Press the top of the switch (STOP) to stop the engine. See the **Switch Functions** section for details.
	Starter Switch	Use the starter switch to start the engine. The engine stop/run switch must be in the RUN position. See the **Switch Functions** section for details.

SWITCH FUNCTIONS

IGNITION/LIGHT KEY SWITCH

Motorcycle riders must remain as visible as possible at all times. To aid in this, the headlight must be on at all times while operating. The headlights automatically operate when the engine is running. Do not modify the ignition/light switch wiring to circumvent the automatic headlight feature.



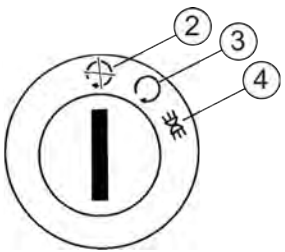

The ignition/light key switch ① controls the electrical functions of the motorcycle. The switch is located on the ignition cover on the left side of the motorcycle.

Before starting the engine ③, read the instructions for starting the engine. See page 62.

Turn the ignition switch to the OFF ② position and remove the ignition key when leaving the motorcycle unattended.

Push the key into the ignition switch while turning it to the PARK position ④. In PARK, the taillight, front position lamp, indicator lights, and license plate light illuminate. Vehicle powered accessories (if equipped) can be operated and the instrumentation is active. The ignition key can be removed.

ENGINE STARTER SWITCH

Read the engine starting procedures before starting the engine. See page 60.

Press and release the starter switch ① to start the engine. The engine stop/run switch must be in the RUN position and the transmission must be in neutral, or the clutch must be disengaged.

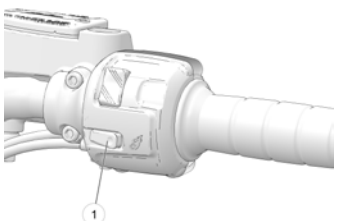

ENGINE STOP/RUN SWITCH

Use the engine stop/run switch to turn the engine off quickly. Turn the key off after the engine stops.

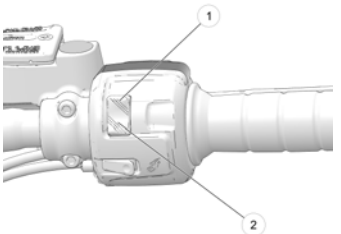

- Press the top of the switch (STOP) ① to interrupt the circuits and stop the engine. The engine should not start or run when the switch is in the STOP position.
- Press the bottom of the switch (RUN) ② to complete the circuits and allow the engine to start and run.

TIP
The headlights and any accessories plugged into power ports will remain on until the ignition key is turned off.

MODE BUTTON

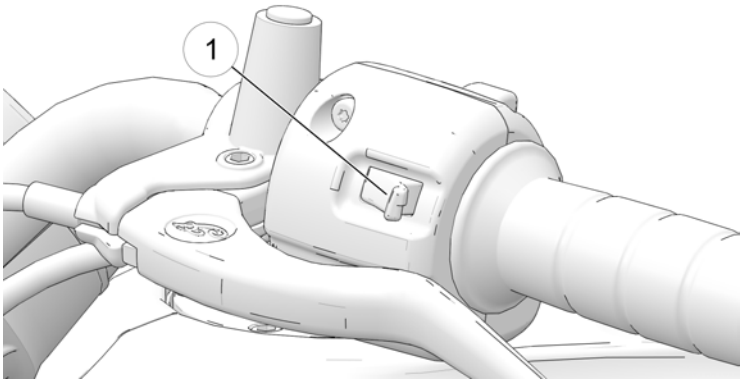

The MODE button ① is located on the front side of the left handlebar controls. With the ignition switch on, use the MODE button to toggle through the modes of the multi-function display.

Use the MODE button to set the display units to either standard or metric units of measurement. See page 37.

HAZARD SWITCH

The power switch must be ON to activate the flashers. When the flashers are active, all four turn signals flash. Flashers will continue to operate whether the power switch is in ON or PARK.

- Press the switch for 1-2 seconds to activate the flashers.
- Press the switch again to cancel the flashers.

HIGH/LOW HEADLIGHT BEAM SWITCH

The high/low headlight beam switch ① toggles the headlight between high beam and low beam. To activate the high beam, press the upper portion of the switch. To activate the low beam, press the lower portion of the switch.

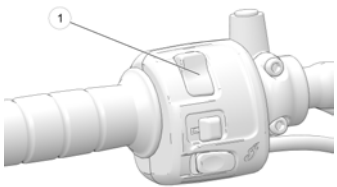

INSTRUMENT CLUSTER

The instrument cluster includes the speedometer, indicator lamps and Multi-Function Display (MFD).

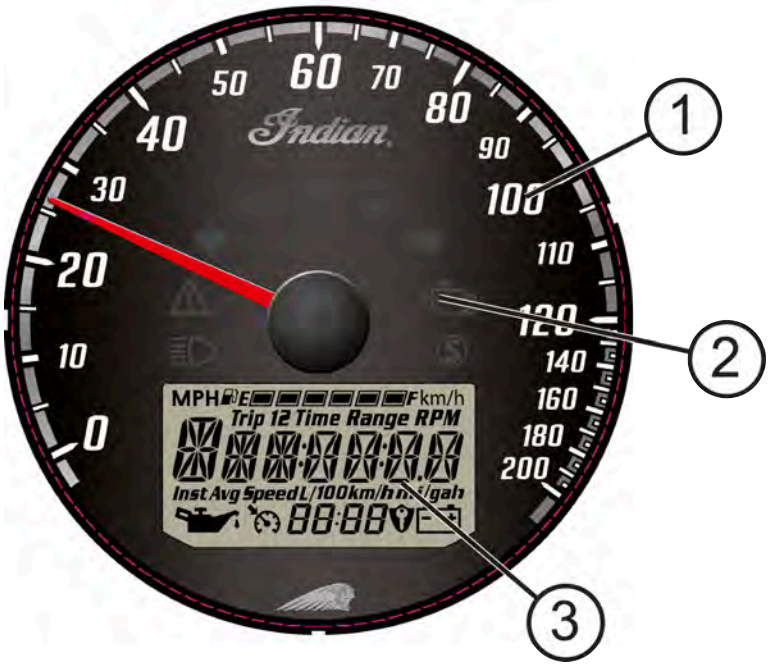

① Speedometer
② Indicator Lamps
③ MFD

SPEEDOMETER

The speedometer displays forward vehicle speed in either miles per hour or kilometers per hour.

INDICATOR LAMPS

LAMP	INDICATES	CONDITION
	Chassis Fault	The alert symbol illuminates if a chassis fault occurs.
	Low Fuel	This lamp illuminates when about 1/2 gallon (1.9 L) of fuel remains in the tank.
	Neutral	This lamp illuminates when the transmission is in neutral.
	High Beam	The lamp illuminates when the headlight switch is set to high beam.
	Turn Signal	The turn signal indicator flashes when the left, right, or both turn signals (hazard) are active. If there is a problem in the signal system, the lamps will flash at twice the normal rate.
	ABS Not Activated (if equipped)	The indicator remains on until the ABS activates, which occurs when vehicle speed exceeds 6 MPH (10 km/h). When the lamp is illuminated, the anti-lock brakes will not activate, but the conventional brake system will continue to operate normally.

LAMP	INDICATES	CONDITION
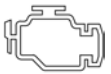	Check Engine	*If this lamp illuminates while the engine is running, see your dealer promptly.* The light will remain on if the tilt sensor shuts down the engine. If abnormal sensor or engine operation is detected the light will remain on as long as the fault condition exists. Retrieve the error codes for diagnosis. See page 41.
	Sidestand Light (if equipped)	The sidestand light will turn on anytime the sidestand is down.
MPH	Vehicle Speed	When standard mode is selected, speed displays in miles per hour.
km/h		When metric mode is selected, speed displays in kilometers per hour.

MULTI-FUNCTION DISPLAY MODES

With the ignition switch on, use the MODE button ① to toggle through the modes of the multi-function display and to change settings in the display.

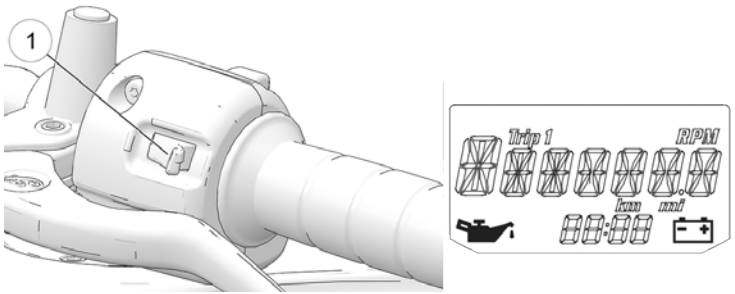

Modes Available	Odometer
	Trip Odometer
	Engine Speed
	Engine Coolant Temperature
	Gear Indicator
	Clock
	Battery Voltage

ODOMETER

The odometer displays total distance traveled.

TRIP ODOMETER

The trip odometer displays total distance traveled since being reset. To reset, toggle to the trip odometer, then press and hold the MODE button until the trip odometer resets to zero.

ENGINE SPEED

Engine speed displays in revolutions per minute (RPM).

ENGINE COOLANT TEMPERATURE

The temperature area displays the temperature of the engine coolant.

BATTERY VOLTAGE

Battery voltage displays real-time battery voltage (V). This will increase while engine is running, due to the alternator.

MULTI-FUNCTION DISPLAY (MFD)

MFD INDICATORS

LAMP	INDICATES	CONDITION
	Low Oil Pressure	This lamp illuminates when oil pressure drops below a safe operating pressure while the engine is running. If this lamp illuminates while the engine is running above idle speed, turn the engine off as soon as safely possible and check the oil level. *If the oil level is correct and the lamp remains on after the engine is restarted, turn the engine off immediately. See your dealer.*
	Low Battery Voltage	This lamp illuminates when battery voltage is low. Turn non-essential accessories off to conserve power. Make sure the charging system is operating properly. See page 121.

CLOCK

NOTE
The clock must be reset any time the battery has been disconnected or discharged.

1. Use the MODE button to toggle to the odometer display.
2. Press and *hold* the MODE button until the hour segment flashes. Release the switch.
3. With the segment flashing, tap the MODE button to advance to the desired setting.
4. Press and *hold* the MODE button until the next segment flashes. Release the switch.
5. Repeat steps 3–4 twice to set the 10-minute and 1-minute segments. After completing the 1-minute segment, step 4 will save the new settings and exit the clock mode.

GEAR INDICATOR

Gear position will display when the transmission is in gear if the motorcycle is moving with the clutch lever released. It will also display when the transmission is in neutral.

DIAGNOSTIC FUNCTIONALITY

Certain conditions will cause the battery indicator to illuminate and an error message to display in the screen. If this occurs, please see your authorized dealer.

MESSAGE	LOCATION	INDICATES
LO	DC Voltage Screen	Voltage remains below 11.0 volts for more than 10 seconds
OV	DC Voltage Screen	Voltage remains above 15.0 volts for more than 10 seconds
ERROR	All	Checksum error (gauge malfunction)

DISPLAY UNITS (STANDARD/METRIC)

The display can be changed to display either standard or metric units of measurement.

	STANDARD DISPLAY	METRIC DISPLAY
Distance	Miles	Kilometers
Temperature	Fahrenheit	Celsius
Time	12-Hour Clock	24-Hour Clock

1. Turn the ignition off.
2. Wait 10 seconds.
3. Press and *hold* the MODE button while turning the key to the ON or PARK position.
4. When the display flashes the distance setting, tap the MODE button to advance to the desired setting.
5. Press and *hold* the MODE button to save the setting and advance to the next display option.
6. Repeat the procedure to change remaining display settings.

ENGINE ERROR CODES

The error screen displays only when the CHECK ENGINE light is on or when it goes on and off during one ignition cycle. Error codes display only during the current ignition cycle. When the ignition switch is turned OFF, the code and message is lost, but will reappear if the fault reoccurs after restarting the engine.

If the CHECK ENGINE indicator lamp illuminates, retrieve the error codes from the display.

1. If the error codes are not displayed, use the MODE button to toggle until "Ck ENG" displays on the main line of the display.
2. Press and hold the MODE button to enter the diagnostics code menu.
3. Record the three numbers displayed in the gear position, clock and odometer displays.
4. See an authorized dealer for code details and diagnosis.

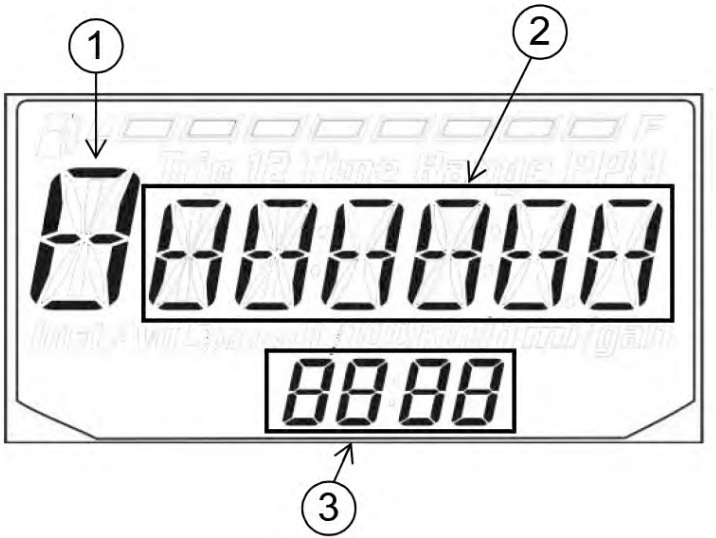

① Error Code Number (0–9)

② Suspect Parameter Number (SPN)

③ Failure Mode Indicator (FMI)

OVER TEMPERATURE DISPLAY AND WARNING INDICATOR

"HOt" displays and the CHECK ENGINE indicator lamp illuminates under the following conditions.

	CONDITION	INDICATES	ACTION REQUIRED
	Engine coolant temperature approaches unsafe operating condition while the engine is running.	Engine coolant temperature is above a safe operating temperature.	Stop the engine as soon as safely possible. Check the coolant level. Check the radiator for debris. Check cooling fan operation. If the warning continues to display after restarting the engine, stop the engine immediately.

BATTERY CHARGE PORT/HEATED GEAR PLUG

The Battery Charge Port/Heated Gear plug① is located behind the ignition switch cover.

⚠ CAUTION

Wait until engine components have cooled before handling the gear plug to avoid burns.

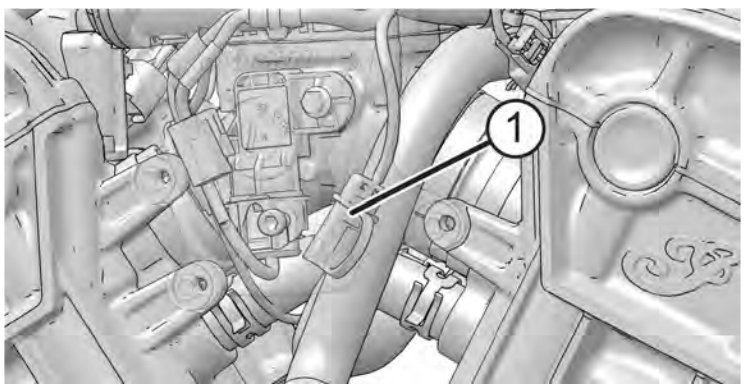

THROTTLE CONTROL GRIP

The throttle control grip is located on the right handlebar. Use the throttle control grip to control engine speed.

While seated in the proper riding position:

- Roll the grip rearward ① to open the throttle (increase engine speed and power).
- Roll the grip forward ② to close the throttle (decrease engine speed and power).

The control grip is spring loaded. When you release the grip, the throttle returns to the idle position.

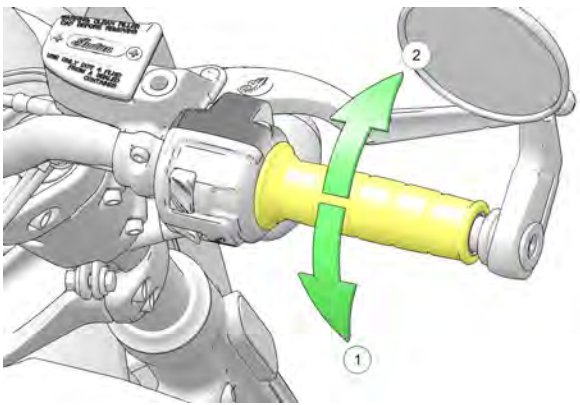

GEAR SHIFT LEVER

The gear shift lever ① is located on the left side of the motorcycle. Operate the lever with your foot.

- Press downward on the toe lever to shift to a lower gear.
- Lift upward on the toe lever to shift to a higher gear.
- Release the lever after each gear shift.
- See the Shifting Gears section for gear shifting procedures.

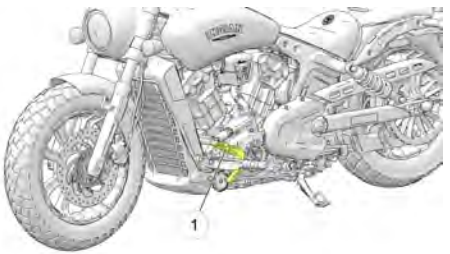

CLUTCH LEVER

The clutch lever ① is located on the left handlebar. Disengage the clutch before shifting gears. For smooth clutch operation, pull the lever quickly and release it in a brisk but controlled manner.

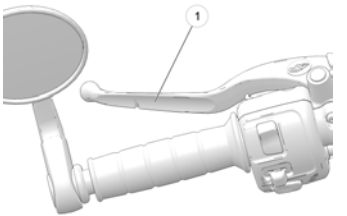

- To disengage the clutch, pull the lever toward the handlebar.
- To engage the clutch, release the lever in a brisk but controlled manner.

SIDESTAND

International models have been equipped with sidestands that have safety switches to prevent operation of the motorcycle if the sidestand is deployed.

⚠ WARNING

An improperly retracted sidestand could contact the ground and cause a loss of control resulting in serious injury or death. Always retract the sidestand fully before operating the motorcycle.

To park the motorcycle, swing the end of the sidestand downward and away from the motorcycle until it is fully extended. Always turn the handlebars to the left for maximum stability. Lean the motorcycle to the left until the sidestand firmly supports the motorcycle.

⚠ CAUTION

If the motorcycle weight is not resting on the sidestand, it will not lock. In this situation, any movement of the motorcycle could cause the sidestand to retract slightly. If the sidestand is not in the full forward position when the motorcycle weight is rested on it, the motorcycle could fall over, possibly causing injury and damage to the motorcycle.

To retract the sidestand, straddle the motorcycle and bring it to the fully upright position. Swing the end of the sidestand upward and toward the motorcycle until it is fully retracted.

See page 68 for parking instructions, including parking on slopes and soft surfaces.

FEELER PEGS

Your bike is equipped with small feeler pegs extending from the end of both footpegs to help protect against damage. A wear notch has been etched near the base of both feeler pegs. Once either feeler peg has been eroded up to the wear notch, a replacement feeler peg is recommended.

MIRRORS

IMPORTANT

Repositioning the side mirrors to the "down" position may result in scratching or damage to fuel tank/badge finish if not properly adjusted.

Your vehicle is equipped with convex mirrors. Objects seen in a mirror may be closer than they appear. Always adjust mirrors before riding.

To adjust the mirrors, sit on the motorcycle in the anticipated riding position. Adjust the mirrors so that you can see a small portion of your shoulders in each mirror.

STEERING LOCK (IF EQUIPPED)

To lock the steering, park the motorcycle and turn the engine off. Turn the handlebars fully to the left. Place the ignition key in the steering lock ① and turn the key counter-clockwise to lock the forks. Remove the key.

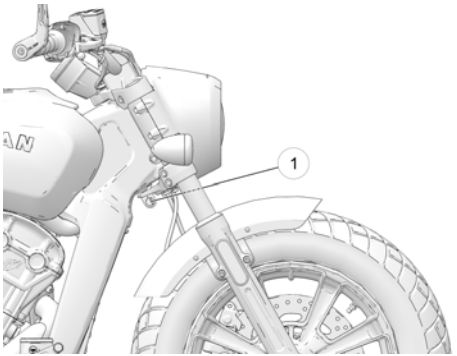

⚠ WARNING

Do not move or operate the motorcycle with the steering locked, as the severely restricted steering could result in loss of control.

BRAKES

ANTI-LOCK BRAKE SYSTEM (ABS) (IF EQUIPPED)

The anti-lock brake system automatically reduces or increases brake pressure as needed to provide optimum braking control, reducing the chance of wheel lock-up during hard braking events or when braking on rough, uneven, slippery or loose surfaces. See the Safe Riding Practices starting page 9.

1. The anti-lock brake system cannot be turned off.
2. The ABS indicator always illuminates when vehicle power is turned on. It remains illuminated until the anti-lock system activates, which occurs when vehicle speed exceeds 6 MPH (10 km/h).
3. When the lamp is illuminated, the anti-lock brakes will not activate, but the conventional brake system will continue to operate normally.
4. When the anti-lock brakes engage during a braking event, the rider will feel pulsing at the brake levers. *Continue to apply steady pressure to the brakes for the best stopping performance.*
5. If the ABS light does not come on when the key is turned to the ON or PARK position, see your authorized INDIAN MOTORCYCLE dealer for service.

ANTI-LOCK BRAKE SYSTEM (ABS) (IF EQUIPPED)

- If the lamp continues to illuminate after vehicle speed exceeds 6 MPH (10 km/h), the ABS system is not functioning. See your INDIAN MOTORCYCLE dealer promptly for service.
- Operating with non-recommended tires or improper tire pressure may reduce the effectiveness of the anti-lock brake system. Always use the recommended size and type of tires specified for your vehicle. Always maintain the recommended tire pressure.
- The anti-lock brake system will not prevent wheel lockup, loss of traction or loss of control *under all conditions.* Always adhere to all safe motorcycle-riding practices as recommended.
- It is not unusual to leave tire marks on the road surface during a hard braking event.
- The anti-lock brake system does not compensate for or reduce the risks associated with:
  - excessive speed
  - reduced traction on rough, uneven or loose surfaces
  - poor judgment
  - improper operation

FRONT BRAKE LEVER

The front brake lever ① is located on the right handlebar. This lever controls only the front brakes. The front brakes should be applied simultaneously with the rear brakes. To apply the front brake, pull the lever toward the handlebar. See page 67 for braking procedures.

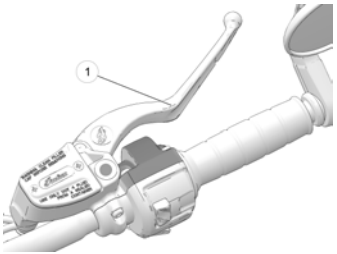

REAR BRAKE PEDAL

⚠ WARNING

Resting your foot on the brake pedal will cause excessive and premature wear of brake pads and reduced braking efficiency, which could result in severe injury or death.

The rear brake pedal ① is located on the right side of the motorcycle. Press downward on the rear brake pedal to apply the rear brake.

See page 67 for braking procedures.

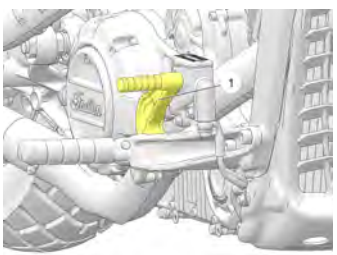

PRE-RIDE INSPECTIONS

OVERVIEW

To keep your motorcycle in safe operating condition, always perform the recommended pre-ride inspections before each ride. This is especially important before making a long trip and when removing the motorcycle from storage.

⚠ WARNING

Failure to perform the recommended pre-ride inspections could result in component failure while riding, which could result in serious injury or death. Always perform the preride inspections before each ride. When inspection reveals the need for adjustment, replacement or repair, perform the service promptly, or see your authorized INDIAN MOTORCYCLE dealer or other qualified dealer for service.

⚠ WARNING

Read the entire Instruments, Features and Controls section of this manual before riding your motorcycle. A complete understanding of the features and capabilities of your motorcycle is essential to its safe operation. Anything less may result in serious injury or death.

You must be familiar with all instruments and controls to perform the pre-ride inspections.

NOTICE

During the pre-ride inspections you may use products that are potentially hazardous, such as oil or brake fluid. When using any of these products, always follow the instructions and warnings on the product packaging.

When inspections reveal the need for adjustment, replacement or repair:

- refer to the maintenance section of this manual
- refer to the INDIAN MOTORCYCLE Service Manual
- or see your authorized INDIAN MOTORCYCLE dealer or other qualified dealer

ELECTRICAL INSPECTIONS

Turn the ignition key to the ON position and move the stop/run switch to RUN before performing the following electrical inspections. Return the ignition key to the OFF position after completing these inspections. If inspection of any electrical item reveals component failure, repair or replace the component before operating the motorcycle.

ITEM	INSPECTION PROCEDURE
Headlamp	The headlights automatically operate whenever ignition switch is in ON position. Once headlamp illuminates, switch to high beam. Verify that the high beam indicator comes on and that lamp brightness increases.
Taillight/Brakelight	Verify that the taillight and license plate light illuminate. Verify that the taillight lamps increase in brightness when the front brake lever is applied and also when the rear brake pedal is applied.
Turn Signals	Move the turn signal switch to the left. Verify that front and rear left turn signals flash, as well as the corresponding light on the indicator panel. Move the switch to the center position and push it inward to cancel the signal. Verify that the signals and the indicator light stop flashing. Repeat the procedure for the right turn signals.
Hazard Warning Flashers	Press and hold the hazard warning flashers switch for 1-2 seconds to activate the hazard warning flashers. Verify that all four turn signals flash, as well as the lamps on the indicator panel. Turn the hazard warning flashers off. Verify that all signals and indicator lamps stop flashing.
Horn	Press the horn switch. Verify that the horn sounds loudly.
Neutral Indicator	Place the transmission in neutral. Verify that the neutral indicator lamp illuminates and that the letter "N" displays in the gear position display.
Low Oil Pressure Indicator	Start the engine. Verify that the low oil pressure indicator is not illuminated.
Engine Stop/Run Switch	Start the engine. Move the stop/run switch to the STOP position. Verify that the engine stops. Attempt to restart the engine to verify that the engine WILL NOT start.

GENERAL INSPECTIONS

ITEM	INSPECTION PROCEDURE
Engine Oil	Check the oil level. See page 52.
Fuel	Check the fuel level. See page 57.
Coolant Level	Check the coolant level in the recovery bottle. See page 78.
Fluid Leaks	Check the vehicle and the ground/floor for any fuel, oil, coolant or hydraulic fluid leaks.
Tires	Inspect condition, pressure and tread depth. See page 53.
Brake Operation	Inspect pedal and lever movement.
Brake Fluid Levels	Check front and rear brake fluid levels.
Brake Components	Inspect hoses and connections.
Throttle	Inspect hand grip and throttle movement.
Clutch	Check lever operation and freeplay.
Front Suspension	Check for leaks, debris and damage.
Steering	Check for smooth operation by turning handlebars full left and full right.
Rear Suspension	Check mounting and inspect for leaks.
Rear Drive Belt	Check for wear or damage. See page 85 and page 86.
Sidestand	Verify smooth operation, inspect pivot bolt and spring.
Fasteners	Inspect for loose, damaged or missing fasteners.
Mirrors	Adjust for proper rear view.

ENGINE OIL LEVEL

With the semi-dry sump lubrication system, the engine oil level on the dipstick will fluctuate, depending on the motorcycle's position and engine temperature when checked. To ensure a proper reading of the engine oil level, follow all inspection procedures closely.

⚠ WARNING

Operating with insufficient, deteriorated or contaminated engine oil will cause accelerated wear and may result in engine or transmission seizure, which could result in loss of control and serious injury or death. Check the oil level frequently.

Always check the oil after running a cold engine at idle for 30 seconds. The oil fill/dipstick is located on the right side of the motorcycle. Always use the recommended oil. See page 135.

1. Position the motorcycle on level ground in the fully upright and centered position.
2. Start the engine (from cold) and allow it to idle for 30 seconds. Stop the engine.
3. Remove the dipstick ① and wipe it clean.

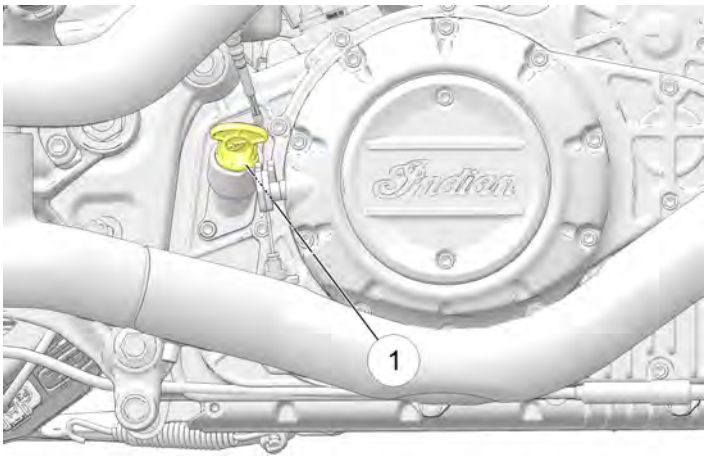

4. Thread the dipstick until fully seated.
5. Remove the dipstick and view the oil level.

NOTICE

Do not overfill. Overfilling can result in loss of engine performance and an oil-saturated air filter. Use a suction device to remove excess oil if overfilled.

6. Add the recommended oil as needed to bring the level to the FULL mark on the dipstick. Verify the level on the dipstick.

TIP

The approximate volume between the FULL ② and ADD ③ marks on the dipstick is 16 oz. (.45 L).

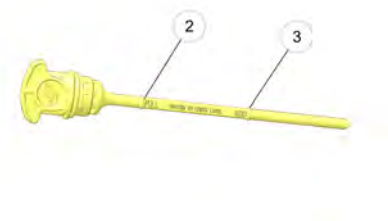

7. Reinstall the dipstick securely.

TIRES

⚠ WARNING

Operating the motorcycle with incorrect tires, incorrect tire pressure or excessively worn tires could cause loss of control or accident. Under inflation can cause a tire to overheat and result in a tire failure. Only use tires approved by INDIAN MOTORCYCLE for the model of the motorcycle. See your dealer for more information. Use of unapproved or an improperly mixed front and rear tire can result in decreased handling performance and stability, potentially leading to reduced control of the motorcycle. Always maintain proper tire pressure as recommended in the rider's manual and on safety labels.

TIRE PRESSURE

Improper tire pressure can result in irregular tire wear, tire failure, reduced fuel economy and a poor riding experience. It can also affect handling and stopping ability.

Slow tire pressure loss over time is normal for a functional tire. Always inspect tire pressure and condition before each ride.

Check tire pressure before riding, when the tires are cold. This will provide the most accurate reading, as riding warms the tires and increases tire air pressure. Tires remain warm for at least 3 hours after a ride. Do not adjust tire pressure immediately after riding. As tires cool, the pressure will drop and result in underinflation. Always check and adjust tire pressure when tires are cold.

Using a good quality pocket-style gauge, adjust tire pressure to the recommended pressure.

TIRE CONDITION

Inspect the tire sidewalls, road contact surface and tread base. If inspection reveals cuts, punctures, cracks or other wear or damage, replace the tire before riding. Only use tires approved by INDIAN MOTORCYCLE for the model of the motorcycle. See your dealer for more information. Use of unapproved or an improperly mixed front and rear tire can result in decreased handling performance and stability, potentially leading to reduced control of the motorcycle.

TIRE TREAD DEPTH

Measure the tread depth near the center of the tread on both tires. See page 103. Replace any tire with a tread depth of less than 1/16 inch (1.6 mm).

FRONT BRAKE FLUID LEVEL

1. Straddle the motorcycle and bring it to the fully upright position. Position the handlebars so that the fluid reservoir is level.
2. View the fluid level through the sight glass ①. The fluid should be clear. Replace cloudy or contaminated fluid.
3. The fluid level should be above the minimum indicator mark ② in the sight glass.
4. If the fluid level is low, inspect brake pads as outlined in the Brake Inspection / Cleaning section. If pads are not worn beyond the service limit, inspect the brake system for leaks. Check for signs of brake fluid leaks around hoses, fittings, reservoir, and brake calipers.
5. Add brake fluid if necessary. See page 97.

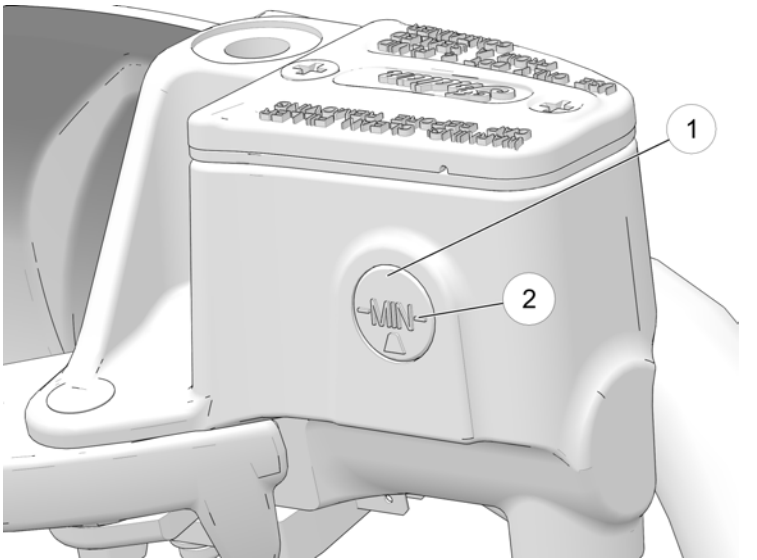

FRONT BRAKE LEVER

1. Pull the front brake lever toward the handlebar and hold it. The lever should move freely and smoothly. The lever should feel firm and continue to feel firm until released.
2. Release the lever. It should return to its rest position quickly when released.
3. If the front brake lever fails to perform as stated, service the brake lever before riding.

REAR BRAKE PEDAL

1. Press downward on the rear brake pedal. It should move freely and smoothly. The pedal should feel firm and continue to feel firm until released.
2. Release the pedal. It should return to its rest position quickly when released.
3. If the rear brake pedal fails to perform as stated or travels too far before beginning to engage the brake, service the brakes before riding.

REAR BRAKE FLUID LEVEL

The rear brake fluid reservoir is located near the rear brake pedal. View the reservoir level from the right side of the vehicle.

1. Position the motorcycle on level ground in the fully upright position.
2. View the brake fluid through the reservoir ①.
3. The fluid should be clear. Replace cloudy or contaminated fluid.
4. The fluid level should be above the minimum indicator mark on the reservoir body. Add brake fluid as needed. See page 96.

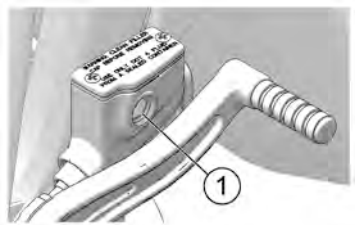

BRAKE LINES

Inspect all brake hoses and connections for dampness or stains from leaking or dried fluid. Tighten any leaking connections to the proper torque values and replace components as necessary. See the *INDIAN MOTORCYCLE Service Manual* or an authorized INDIAN MOTORCYCLE dealer or other qualified dealer.

⚠ WARNING

Brake fluid leaks or low brake fluid levels could cause brake system failure, which could result in serious injury or death. Do not operate the vehicle with low brake fluid levels or when leaks are evident (dampness or stains from dried fluid). See your authorized INDIAN MOTORCYCLE dealer or other qualified dealer.

MECHANICAL CLUTCH

1. Squeeze the clutch lever ① toward the handlebar and release it. It should move freely and smoothly, and it should return to the rest position quickly when released. If the lever fails to perform as stated, service the clutch lever before riding.

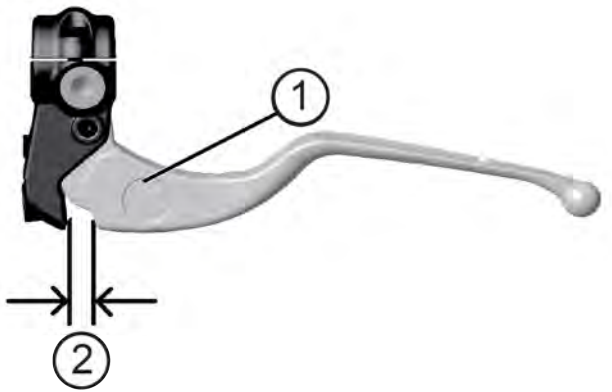

2. Freeplay (gap) is the amount of lever movement from the rest position to the point of cable resistance. Clutch lever freeplay should be 0.5-1.5 mm②. Measure the gap between the clutch lever and the lever housing. See page 93. Adjust clutch lever freeplay if necessary.

NOTE

The starter interlock switch is dependent on the clutch lever freeplay being set correctly to ensure activation of the clutch safety switch.

THROTTLE

Rotate the throttle control grip. It should rotate smoothly from the rest position to the completely open position. It should return to the rest position quickly when released.

FRONT SUSPENSION

Inspect the front forks for oil leaks or damage, and verify smooth suspension operation. See the Front Fork / Suspension Inspection section for details.

REAR SUSPENSION

Check the rear shock absorber mounting and inspect for leaks. See your dealer for service if you discover leaks or malfunction of any kind. See the Rear Shock Preload (Ride Height) sections regarding inspection and adjustments for details.

⚠ WARNING

Inadequate ground clearance could result in components contacting the ground, causing loss of control and serious injury or death. Always ensure ground clearance is at specification.

REAR DRIVE BELT

1. Check the drive belt teeth for stones or other debris.
2. Inspect drive belt condition. See page 87. If you discover cracks, broken teeth or frayed edges, replace the drive belt before riding. See the *INDIAN MOTORCYCLE Service Manual* or an authorized INDIAN MOTORCYCLE dealer or other qualified dealer.

FUEL LEVEL

1. Position the motorcycle on level ground in the fully upright position.
2. Slowly open the fuel cap.
3. View the fuel level in the tank.
4. Refuel as needed to the bottom of the filler neck. See the Fueling section for fueling instructions. See the Fuel Recommendations section for fuel specifications.

SIDESTAND

1. On level ground, straddle the motorcycle and bring it to the fully upright position.
2. Move the sidestand up to the stored position and down to the fully extended position several times. It should move smoothly and quietly. Make sure the return spring holds the sidestand tightly in place when the sidestand is in the stored position. Adjust or replace a loose spring.
3. Inspect the sidestand pivot bolt for looseness or wear. Tighten or replace a loose or worn bolt.

FASTENERS

1. Inspect the entire motorcycle chassis and engine for loose, damaged or missing fasteners.
2. Tighten loose fasteners to the proper torque. See the *INDIAN MOTORCYCLE Service Manual* or an authorized INDIAN MOTORCYCLE dealer or other qualified dealer.

NOTICE
Always replace stripped, damaged or broken fasteners before riding. Use genuine INDIAN MOTORCYCLE fasteners of equal size and strength.

OPERATION

OVERVIEW

The operation section of this manual describes how to ensure maximum performance and longevity through the proper care and operation of your motorcycle.

Important areas covered by the operation section include:

- Engine Break-In
- Fueling
- Starting the Engine
- Shifting Gears
- Accelerating
- Braking
- Stopping the Engine
- Parking

NOTICE

Even if you're an experienced motorcycle operator or passenger, read all of the safety information in this manual before operating the motorcycle.

NOTICE

Failure to properly follow the engine break-in procedures outlined in this manual can result in serious damage to the engine. Follow all break-in procedures carefully. Avoid full throttle operation and other conditions that may place an excessive load on the engine during the break-in period.

ENGINE BREAK-IN

The engine break-in period for your motorcycle is the first 500 miles (800 km) of operation. During this break-in period, critical engine parts require special wear-in procedures so they seat and mate properly. Read, understand and follow all break-in procedures to ensure the long-term performance and durability of your engine.

The more cautiously you treat your motorcycle during the break-in period, the more satisfied you will be with its performance later on. Overloading the engine at low RPM and/or running the engine prematurely at high RPM may result in damage to the engine components.

Observe the following precautions during the break-in period:

- Upon initial start-up, do not allow the engine to idle for long periods as overheating can occur.
- Avoid fast starts with wide open throttle. Drive slowly until the engine warms up.
- Avoid running the engine at extremely low RPM in higher gears (lugging the engine).
- Drive within the recommended operating speeds and gears. See page 60.

OPERATING SPEEDS AND GEARS

ODOMETER		BREAK-IN PROCEDURE
MILES	KM	
0-90	0-145	Do not operate for extended periods above 1/3 throttle or at any one throttle position. Vary engine speed frequently.
91-300	146-483	Do not operate for extended periods above 1/2 throttle or at any one throttle position. Vary engine speed frequently.
301-500	484-800	Do not operate for extended periods above 3/4 throttle.
At 500	At 800	Perform the break-in maintenance outlined in the maintenance section of this manual. Break-in maintenance should be performed by a dealership. Break-in maintenance must include inspection, adjustments, fastener tightening and an engine oil and filter change. Performing break-in maintenance at the required odometer reading helps ensure peak engine performance, minimal exhaust emissions and maximum service life of the engine.

FUELING

Always dismount the motorcycle and refuel on level ground with the sidestand down. Review the fuel warnings. See page 16. Use only the recommended fuel. See the Fuel Recommendation section for details.

⚠ WARNING

Overflows or spilled gasoline could contact a hot engine or exhaust system and cause a fire, which could result in serious injury or death. Do not allow gasoline to contact hot components.

⚠ WARNING

Always open the fuel cap slowly and fill the fuel tank slowly to prevent spillage. Do not overfill the fuel tank. Leave space in the tank to allow for the fuel to expand.

1. To open the fuel tank cap ①, insert the ignition key into the cap lock and turn it clockwise. Hold the key in this position while lifting the cap.

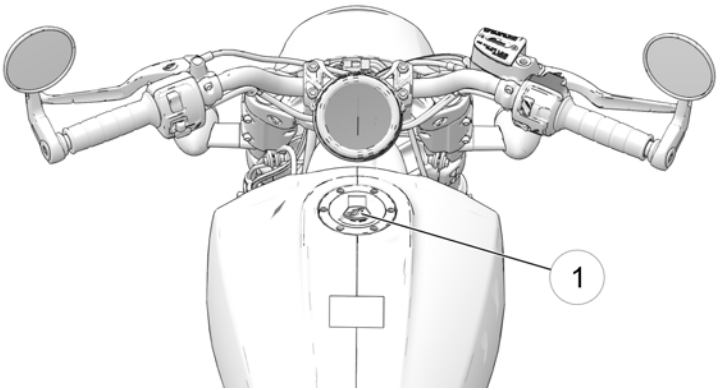

2. Insert the fuel nozzle into the fuel tank filler neck.
3. Hold the nozzle while filling. Do not rest the weight of the nozzle and hose on the filler neck. Do not leave the nozzle unattended.

4. Add fuel to the tank until it crests the oval-shaped opening ② in the filler neck. The tank is full at this level. Do not overfill the fuel tank.

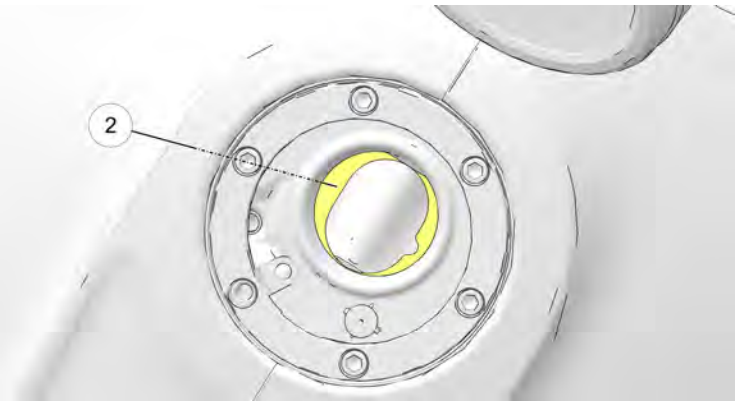

5. Always close and lock the fuel cap before remounting the motorcycle. With the key rotated clockwise, close the fuel cap with your opposite hand and press it down firmly. Turn the key counter-clockwise to secure the lock.
6. If the motorcycle runs out of fuel, prime the system before attempting to restart the engine. See page 62.

NOTICE
Fuel can damage painted surfaces and plastic parts. If gasoline spills on the any part of the motorcycle, immediately rinse it off with water or wipe it dry with a clean cloth.

PRIMING THE FUEL SYSTEM

If the motorcycle runs out of fuel, prime the fuel system before attempting to restart the engine.

1. Fill the fuel tank.
2. Turn the ignition key to the ON position.
3. Move the engine stop/run switch to the RUN position.
4. Allow the fuel pump to run until it stops (about 2 seconds).
5. Move the engine stop/run switch to the STOP position.
6. Repeat steps 3–5 four to five times.
7. Turn the key to the OFF position.
8. Start the engine. See the Starting the Engine section for details.

STARTING THE ENGINE

The starter interlock system allows the engine to be started only when the transmission is in neutral, or when the transmission is in gear with the clutch disengaged (clutch lever pulled in).

1. Perform the Pre-Ride Inspections. See page 49. Properly secure any cargo.
2. Straddle the motorcycle and bring it to the fully upright position. Retract the sidestand.
3. Turn the ignition key to the ON position.
4. Move the engine stop/run switch to the RUN position.
5. Shift the transmission to neutral.

6. Apply the front brakes. Disengage the clutch (pull the clutch lever fully toward the handlebar).
7. Press and release the starter switch to start the engine. The starter motor will crank until the engine starts, but no more than 3 seconds. If the engine does not start, wait five seconds, then try again.
8. *If starting a COOL engine,* DO NOT open the throttle while starting. Idle speed is computer controlled and will adjust automatically. Allow the engine to warm up for 30 seconds minimum at low RPM after starting. Do not run the engine above 2500 RPM. *If starting a WARM engine,* DO NOT open the throttle while starting.
9. If either the check engine indicator or the low oil pressure indicator remains on after the engine starts, stop the engine *immediately*. Refer to the low oil pressure indicator information on page 38.

NOTICE
Operating an engine with a misfire or non-firing cylinder can overheat the catalytic converter, which could result in catalytic converter damage and loss of emission control. DO NOT OPERATE the motorcycle if a misfire or non-firing cylinder exists.

10. Leave the throttle closed and allow the engine to idle. Idle speed will gradually slow to normal as the engine warms to operating temperature.

NOTICE
Do not rev the engine or put the transmission in gear immediately after starting the engine. Allow the engine to idle for about 30 seconds after a warm start or at least one minute after a cold start (longer in cold weather). This will allow oil to reach all areas before the engine is put under load.

NOTICE
Do not run the engine at high RPM with the clutch disengaged or the transmission in neutral. Maximum safe engine speed is 8300 RPM. Never exceed the maximum safe RPM as this could result in serious engine damage.

MISFIRE DETECTION

If a misfire is detected, the check engine indicator lamp will begin to flash and fuel will be cut to the affected cylinder(s). The check engine indicator lamp will continue to flash until the ignition switch has been moved to the off position. Restarting the engine will clear the flashing indicator and restore fuel to both cylinders. If another misfire occurs, the check engine indicator lamp will resume flashing and fuel will once again be cut to the affected cylinder(s). After the 3rd misfire, P0314 misfire fault is determined & set, the check engine light will remain on and fuel will be cut to the affected cylinder(s). If this occurs, your INDIAN MOTORCYCLE dealer can assist.

SHIFTING GEARS

⚠ WARNING

Forced shifting (with clutch engaged) could cause damage to the engine, transmission and drive train. Such damage could cause loss of control, which could result in serious injury or death. Always pull the clutch lever fully toward the handlebars to disengage the clutch before shifting gears.

Your motorcycle may be equipped with either a five-speed or a six-speed transmission. Neutral is located between first and second gear.

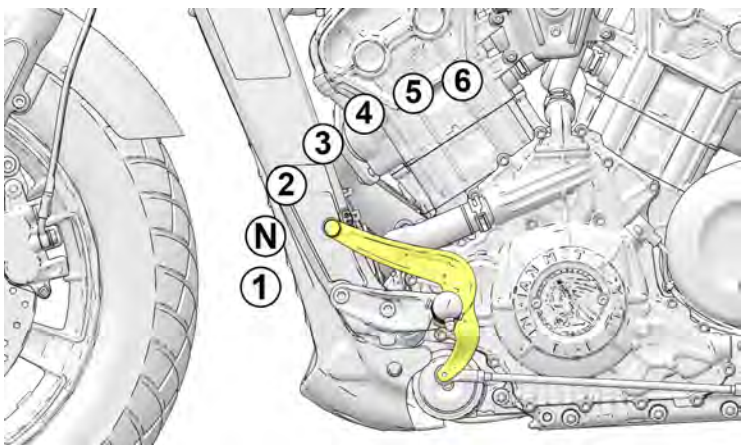

Press downward on the toe lever to shift to a lower gear. Lift upward on the toe lever to shift to a higher gear. Release the clutch lever after each gear shift.

Shifting to neutral is easiest if the motorcycle is rolling slowly. To shift from first gear to neutral, gently lift the toe lever a half stroke.

TIP

The transmission is in neutral if you can move the motorcycle forward or rearward freely without disengaging the clutch. If the ignition switch is in the ON position, the neutral indicator illuminates when the transmission is in neutral.

SHIFTING GEARS WHILE STATIONARY

To locate neutral when the motorcycle is stationary, use one of the following techniques to load and unload the transmission:

1. With the clutch disengaged (lever pulled inward), shift into neutral while rocking the motorcycle forward and rearward.
2. With the transmission in first gear, gently release the clutch until it just begins to engage. Apply upward pressure on the toe lever and quickly pull the clutch inward.

NOTICE

There is a Neutral indicator light on the instrument cluster.

SHIFTING GEARS WHILE DRIVING

⚠ WARNING

Downshifting improperly could cause transmission damage, loss of traction and loss of control, which could result in serious injury or death.

- Reduce speed before downshifting. Always downshift within the recommended shift points.
- Use extreme caution when downshifting on wet, slippery or other low traction surfaces. Release the clutch lever very gradually in these conditions.
- Avoid downshifting in a curve. Downshift before entering the curve.

1. Start the engine. See page 62.
2. With the engine at idle speed, apply the front brakes.
3. Disengage the clutch (pull the clutch lever fully toward the handlebar).
4. Push the toe lever downward until you feel it stop in first gear.
5. Release the brake lever.
6. Simultaneously release the clutch lever while opening the throttle (rolling the throttle control grip rearward) in one smooth motion. As the clutch begins to engage, the motorcycle will move forward.
7. To shift to a higher gear, accelerate smoothly to the recommended shift point. See *Recommended Shift Points* chart. With a quick motion, simultaneously close the throttle completely and disengage the clutch. Raise the toe shift lever until you feel it stop at the next gear. Simultaneously release the clutch lever and open the throttle in one smooth motion.
8. To shift to a lower gear (downshift), simultaneously pull the clutch lever toward the handlebar and close the throttle. Move the toe shift lever downward until you feel it stop at the next gear. Simultaneously release the clutch lever while opening the throttle.

NOTICE

Within the recommended speed ranges (see Recommended Shift Points chart), you can downshift to slow the motorcycle or to increase power. You may want to downshift when climbing a hill or passing. Downshifting also helps to decrease speed when combined with closing the throttle.

RECOMMENDED SHIFT POINTS

UPSHIFTING (ACCELERATING)		DOWNSHIFTING (DECELERATING)	
GEAR CHANGE	**RECOMMENDED SPEED**	**GEAR CHANGE**	**RECOMMENDED SPEED**
1 to 2	17 mph (27 km/h)	6 to 5 (if equipped)	40 mph (65 km/h)
2 to 3	24 mph (38 km/h)	5 to 4	35 mph (56 km/h)
3 to 4	35 mph (56 km/h)	4 to 3	29 mph (47 km/h)
4 to 5	41 mph (66 km/h)	3 to 2	20 mph (33 km/h)
5 to 6 (if equipped)	50 mph (81 km/h)	2 to 1	10 mph (16 km/h)

BRAKING

Always allow sufficient stopping distance so that brakes can be applied gradually.

NOTICE

Applying slightly more front brake than rear brake generally provides the best braking performance.

1. To slow the motorcycle with the brakes, close the throttle and apply the front and rear brakes evenly and gradually.

NOTICE

When the anti-lock brakes engage during a braking event, the rider will feel pulsing at the brake lever. Continue to apply steady pressure to the brakes for the best stopping performance.

2. As the motorcycle slows, disengage the clutch, or downshift each time vehicle speed reaches a downshift point.

⚠ WARNING

Braking improperly could result in loss of control, which could result in serious injury or death. Avoid braking abruptly. Always apply the brakes gradually, especially on wet, slippery or other low traction surfaces. Avoid braking in a curve or turn. Bring the motorcycle to the upright position before applying the brakes.

ACCELERATING

Accelerate by opening the throttle (rolling the throttle control grip rearward). For even acceleration, open the throttle with a smooth, continuous motion. When you reach the recommended speed for upshifting, shift up one gear.

⚠ WARNING

Accelerating abruptly could cause your body to shift rearward suddenly, which could result in loss of control. Accelerating abruptly could also cause loss of control on low traction surfaces. Loss of control could result in serious injury or death. Always accelerate gradually, especially on wet, slippery or other low traction surfaces.

STOPPING THE ENGINE

Before stopping the engine, bring the motorcycle to a complete stop. Shift to neutral or disengage the clutch.

⚠ WARNING

Stopping the engine with the transmission in gear while the motorcycle is moving could cause loss of rear wheel traction or engine and transmission damage, which could cause loss of control and serious injury or death. Always stop the engine after the motorcycle is fully stopped and the transmission is in neutral. If the engine stops unexpectedly while the motorcycle is moving, pull the clutch and guide the motorcycle to a safe location off the road and away from traffic. Turn the ignition switch off.

1. When fully stopped, shift into neutral.
2. Move the engine stop/run switch to the STOP position.
3. Turn the ignition switch off. Remove the ignition key.

PARKING

Choose a firm level surface to park the motorcycle.

1. When fully stopped, shift into neutral.
2. Stop the engine.
3. Fully extend the sidestand.
4. Turn the handlebars to the left and lean the motorcycle to the left until the sidestand firmly supports the motorcycle.
5. Remove the ignition key.

PARKING ON A SLOPE

If parking on a slope is unavoidable, park with the front wheel uphill from the rear wheel. Place the transmission in first gear and position the motorcycle so that it is stable when it rests on the sidestand.

NOTICE

Always park with the front wheel uphill from the rear wheel when parking on a slope. If the front wheel is downhill from the rear wheel, the sidestand could retract and cause a tipover.

PARKING ON A SOFT SURFACE

If parking on a soft surface is unavoidable, place a sidestand footrest under the foot of the sidestand to provide a firm surface. The sidestand footrest must be strong enough and large enough to support the motorcycle's weight without sinking into the parking surface.

Asphalt becomes soft in hot weather. A sidestand can sink into soft asphalt and the motorcycle may fall. When parking on asphalt in hot weather, use a sidestand footrest.

⚠ CAUTION

Hot engine and exhaust components can cause burns to skin and can ignite a fire if exposed to flammable materials. Always park the motorcycle clear of flammable materials and where people are not likely to contact hot components.

MAINTENANCE
SERVICE PROCEDURES

Proper maintenance assures the highest level of safety, durability and dependability for your motorcycle. Break-in maintenance is required to ensure warranty coverage and proper emissions system operation.

- Perform the *break-in maintenance procedures* when the motorcycle's odometer registers 500 miles (800 km). Please see your authorized dealer for this service.
- Perform the recommended *periodic maintenance* at the intervals specified in the Periodic Maintenance Table.

SAFETY DURING SERVICE PROCEDURES

⚠ WARNING

Failure to follow all recommended precautions and procedures could result in serious injury or death. Always heed all safety precautions and follow all operation, inspection and maintenance procedures outlined in this manual.

- Improperly installed or adjusted components can make the motorcycle unstable or hard to handle. Improperly installed electrical components can cause engine or electrical system failure. In either event, damage or serious injury could result. If you do not have the time, tools and expertise necessary to complete a procedure properly, please see your dealer for service.
- Review the safety-related maintenance information in the Safety Maintenance section.
- Before beginning any maintenance procedure, read the instructions for the entire procedure.
- Always position the motorcycle on a firm level surface before performing service. Make sure the motorcycle will not tip or fall while elevated or while on the sidestand. See the Elevating the Vehicle section for details.
- Hot engine and exhaust components can cause burns to skin and can ignite a fire if exposed to flammable materials. Always park the motorcycle clear of flammable materials and where people are not likely to contact hot components.
- Wear eye and face protection when using pressurized air.
- Never start the engine or let it run in an enclosed area. Engine exhaust fumes are poisonous and can cause loss of consciousness or death in a short time.
- During some procedures you may use potentially hazardous products such as oil or brake fluid. Always follow the instructions and warnings on the product packaging.

ROAD TESTS

Before returning the motorcycle to regular use after performing service, road test it in a safe environment. Pay special attention to the proper fit and operation of all serviced components. Make any corrections or additional adjustments necessary to ensure safe vehicle performance.

BREAK-IN MAINTENANCE

Perform the break-in maintenance procedures when the motorcycle's odometer registers 500 miles (800 km). Please see your authorized dealer for this service.

Performing the break-in maintenance will help ensure optimum engine performance for the entire service life of the engine. Your dealer will change engine oil, inspect all fluids and serviceable components, ensure that all fasteners are tightened and make other adjustments as needed.

RE-TORQUE EXHAUST HOSE CLAMPS

After 500 miles (800 km) of driving, check orientation and re-torque all nine (9) hose clamps① along the exhaust.

TORQUE
27 ± 3 in-lbs (3 ± 0.3 N·m)

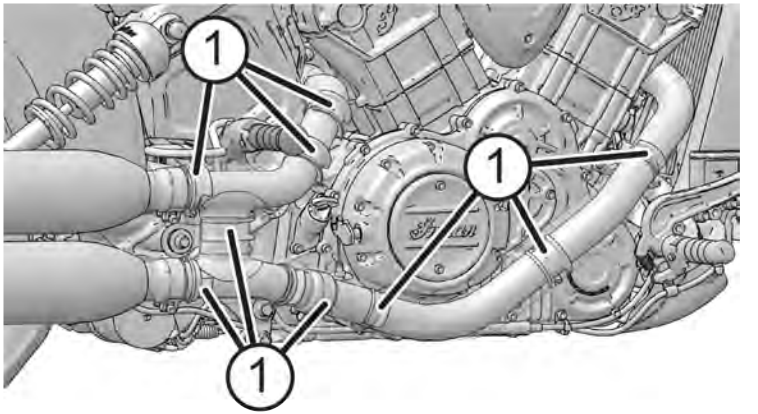

MAJOR MAINTENANCE

Major repairs typically require technical skills and specially designed tools. Emission system service requires special tools and training and should be performed by your dealer. See the *INDIAN MOTORCYCLE Service Manual* or an authorized INDIAN MOTORCYCLE dealer or other qualified dealer.

PERIODIC MAINTENANCE

Inspect, clean, lubricate, adjust and replace parts as necessary. When inspection reveals the need for replacement parts, use genuine INDIAN MOTORCYCLE parts available from your dealer. Record service and maintenance information in the Maintenance Log beginning on page 151.

Perform maintenance at the intervals specified in the Periodic Maintenance Table. *Vehicles subjected to severe use must be inspected and serviced more frequently.*

SEVERE USE DEFINITION

- high speed operation for extended periods
- low speed operation for extended periods
- operation in dusty or otherwise adverse conditions
- operation in cold weather (temperatures below freezing)

PERIODIC MAINTENANCE TABLE

ENGINE

	Odometer Reading in Miles (Kilometers)																			
Component	500 (800)	2,500 (4,000) & every 5,000 (8,000) thereafter	5,000 (8,000)		10,000 (16,000)		15,000 (24,000)		20,000 (32,000)		25,000 (40,000)		30,000 (48,000)		35,000 (56,000)		40,000 (64,000)		45,000 (72,000)		50,000 (80,000)
Engine Oil & Filter*	R	-	-		R		-		R		-		R		-		R		-		R
Crankcase Vent	I	I	I		I		I		I		I		I		I		I		I		I
Engine Compression	I				I				I				I				I				I
Oil Lines/Oil System Inspection	I	I	I		I		I		I		I		I		I		I		I		I
Air Filter	I	I	I		R		I		R		I		R		I		R		I		R
Cooling System/Radiator	I	I	I		I		I		I		I		I		I		I		I		R

Exhaust System	I	I	I		I		I		I		I		I		I		I		I		I
Valve Lash Clearance	-		-		-		-		I		-		-		-		I		-		-
Spark Plugs	-	-	-		-		I		-		-		R		-		-		I		-
Feeler Pegs	I	-	I		I		I		I		I		I		I		I		I		I

Maintenance Key: I = Inspect, clean, adjust, correct or replace if necessary; **P** = Perform; **R** = Replace/Rebuild
L = Lubricate w/ proper lubricant; ***** = Replace at specified interval or annually; ****** = Replace as specified or every 2 years

CHASSIS

	Odometer Reading in Miles (Kilometers)																			
Component See table key below	500 (800)	2,500 (4,000) & every 5,000 (8,000) thereafter	5,000 (8,000)		10,000 (16,000)		15,000 (24,000)		20,000 (32,000)		25,000 (40,000)		30,000 (48,000)		35,000 (56,000)		40,000 (64,000)		45,000 (72,000)		50,000 (80,000)
Battery/Connections	I	I	I		I		I		I		I		I		I		I		I		I
Brake Fluid**	I	I	I		R		I		R		I		R		I		R		I		R
Brake Lines/Brake Pads	I	I	I		I		I		I		I		I		I		I		I		I
Clutch Cable	I	-	I		L		I		L		I		L		I		L		I		L
Clutch Lever (Mechanical)	L	-	I		L		I		L		I		L		I		L		I		L
Diagnostic Codes	I	I	I		I		I		I		I		I		I		I		I		I
Drive Belt (Rear)	I	I	I		I		I		I		I		R		I		I		I		I
Drive Belt Tension Adjustment	I	I	I		I		I		I		I		I		I		I		I		I
Electrical Equipment/Switches	I	I	I		I		I		I		I		I		I		I		I		I

Evaporative Emission Control System (if equipped)	I	I	I		I		I		I		I		I		I		I		I		I
Fasteners	I	I	I		I		I		I		I		I		I		I		I		I
Front Brake Lever	L	-	I		L		I		L		I		L		I		L		I		L
ABS Components	I	I	I		I		I		I		I		I		I		I		I		I
Front Fork Oil**	I		I		I		R		I		I		R		I		I		R		I
Front Fork/Axle	I	I	I		I		I		I		I		I		I		I		I		I
Fuel System/Lines/Fittings	I	I	I		I		I		I		I		I		I		I		I		I
Fuel Filter	-	-	-		-		-		-		R		-		-		-		-		R
Gear Shift Lever	I	I	I		L		I		L		I		L		I		L		I		L
Headlamp	I	I	-		I		-		I		-		I		-		I		-		I
Rear Suspension Rocker	I	I	I		I		L		I		I		L		I		I		L		I
Rear Shock Unit	I	I	I		I		I		I		I		I		I		I		I		R
Rear Wheel Alignment	I	I	I		I		I		I		I		I		I		I		I		I
Rear Brake Pedal	I	I	I		L		I		L		I		L		I		L		I		L
Road Test	P	P	P		P		P		P		P		P		P		P		P		P
Sidestand	L	I	L		I		I		I		I		I		I		I		I		I
Steering Bearings	I	I	I		I		I		I		I		I		I		I		I		I
Swingarm/Rear Axle	I	I	I		I		I		I		I		I		I		I		I		I
Tires/Wheels/Spokes	I	I	I		I		I		I		I		I		I		I		I		I

Maintenance Key: I = Inspect, clean, adjust, correct or replace if necessary; **P** = Perform; **R** = Replace/Rebuild
L = Lubricate w/ proper lubricant; * = Replace at specified interval or annually; ** = Replace as specified or every 2 years

ENGINE OIL/FILTER CHANGE

Follow all instructions carefully. Do not overfill.

Change the engine oil at the intervals specified in the *Periodic Maintenance Table* section. Change the oil more frequently if the motorcycle is subjected to severe use, especially operation in cold weather. See page 73. Always use the recommended oil. See page 135.

NOTICE

Failure to perform frequent oil changes during cold weather operation can result in condensation forming. Freezing condensation can result in plugged oil lines and serious engine damage.

NOTICE

After an oil change, the low oil pressure indicator may illuminate when the engine is started. If this occurs, do not increase RPM above idle speed until the indicator turns off. Operating above idle speed could result in damage to the engine.

1. Change the oil and filter ① when the engine is warm. If the engine is cold, start the engine and allow it to run at idle for at least five (5) minutes.
2. Park the motorcycle with the sidestand down on a firm, level surface. For proper oil drain, use a service lift to ensure the motorcycle is vertically centered.
3. Clean the area around the two drain plugs ②. Place a drain pan under both drain plugs.

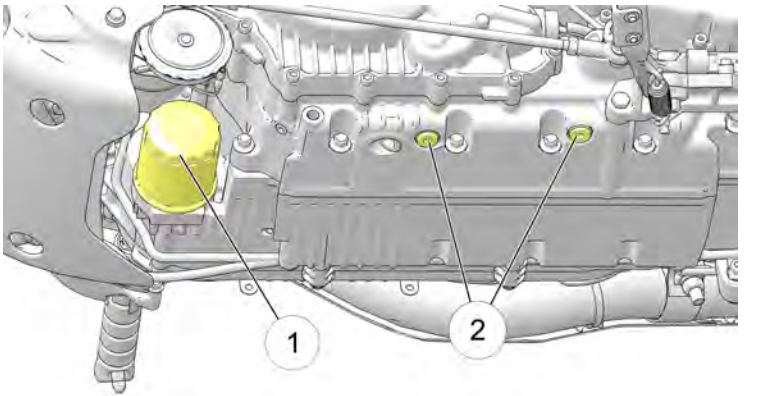

⚠ CAUTION

Hot oil can cause burns to skin. Do not allow hot oil to contact skin.

4. Remove the drain plugs. Allow the oil to drain completely.
5. Install new sealing washers on the drain plugs. The sealing surfaces on drain plugs and engine should be clean and free of burrs, nicks or scratches.

6. Reinstall the drain plugs.

TORQUE: 15 ft-lbs (20 Nm)

7. Place a drain pan or shop towels under the oil filter. Using an oil filter wrench, turn the filter counter-clockwise to remove it. If necessary, remove the horn bracket to improve access.
8. Using a clean dry cloth, clean the filter sealing surface on the engine.
9. Lubricate the o-ring on the new filter with a film of fresh engine oil. Check to make sure the o-ring is in good condition.
10. Install the new filter and rotate it clockwise by hand until the filter gasket contacts the sealing surface, then turn it an additional 3/4 to one full turn.
11. Reinstall the horn bracket if it was removed.
12. Remove the dipstick. Using a funnel, add 3-4 qts. (2.8-3.8 L) of the recommended oil. Reinstall the dipstick securely.
13. With the motorcycle in an upright, centered position, start the engine and allow it to idle for 30 seconds. Stop the engine.
14. Add the recommended oil as needed to bring the level to the FULL mark on the dipstick. Verify the level on the dipstick.

TIP
The approximate volume between the ADD and FULL marks on the dipstick is 16 oz. (.45 L).

15. Reinstall the dipstick securely

NOTICE
Do not overfill. Overfilling can result in loss of engine performance and an oil-saturated air filter. Use a suction device to remove excess oil if overfilled.

16. Dispose of used filter and oil properly.

NOTICE
After an oil change, the low oil pressure indicator may illuminate when the engine is started. If this occurs, do not increase RPM above idle speed until the indicator turns off. Operating above idle speed could result in damage to the engine.

COOLING SYSTEM

The engine coolant level is controlled by the recovery system. Recovery system components are the recovery bottle, the radiator filler neck, the radiator pressure cap and the connecting hose.

As coolant operating temperature increases, the expanding (heated) excess coolant is forced out of the engine, past the pressure cap, and into the recovery bottle. As engine coolant temperature decreases the contracting (cooled) coolant is drawn back up from the bottle, past the pressure cap, and into the radiator.

Some coolant level drop on new vehicles is normal as the system is purging itself of trapped air. Check the coolant level and maintain as recommended by adding coolant to the recovery bottle.

INDIAN recommends the use of Antifreeze 50/50 Premix. This antifreeze is already premixed and ready to use. Do not dilute with water.

To ensure that the coolant maintains its ability to protect the engine, we recommend that the system be completely drained every five (5) years or 50,000 miles (80,467 km), whichever comes first. Please see your dealer for this service.

COOLANT LEVEL INSPECTION

TIP
A flashlight is required for viewing the coolant level.

1. Allow the engine to cool before checking coolant level.
2. Position the motorcycle on level ground in the fully upright position.
3. Place a flashlight ③ flush against an accessible area of the recovery bottle to illuminate the interior. View the coolant level through the window in the heat shield ②.

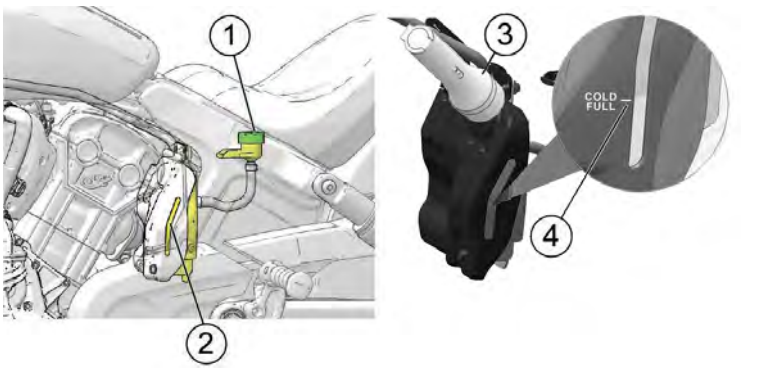

4. Maintain the coolant level at the COLD FULL ④ mark on the recovery bottle (when the fluid is cool).
5. If the level is low, remove the seat to access the coolant fill cap ①.

TIP
The recovery bottle is vented to prevent overfilling. Coolant will vent onto the ground if overfilled.

6. Remove the fill cap and add coolant. Do not overfill.
7. Reinstall the cap.

AIR FILTER

Inspect and replace the air filter at the intervals specified in the *Periodic Maintenance Table* section. Inspect more often if riding in unusually wet or dusty conditions.

1. Remove the seat. See the Seat Removal sections for details.
2. Remove the fuel tank. See page 80.

NOTICE
Use care to prevent debris from entering the air box when the filter is removed.

3. Loosen the six (6) captive air filter screws ① and remove the air filter ②.

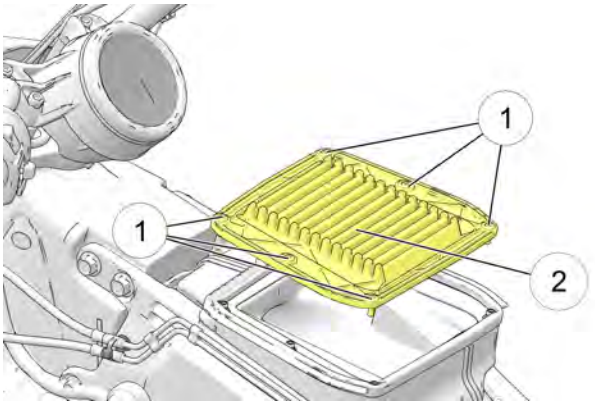

4. Inspect the air filter. Do not attempt to clean the air filter. Replace a soiled or damaged filter with a new filter.
5. Reinstall the air filter or install a new air filter.
6. Torque screws to specification.

TORQUE: 24 in-lbs (2.7 Nm)

7. Reinstall the fuel tank. See page 83.
8. Reinstall the seat. See the Seat Removal sections for details.

FUEL FILTER

The fuel filter is attached to the electric fuel pump located inside the fuel tank. See your authorized INDIAN MOTORCYCLE dealer or other qualified dealer for replacement.

FUEL TANK REMOVAL

Please read the entire removal and reinstallaton procedure before beginning. Do not attempt to remove and install the fuel tank if you're not comfortable with this procedure. Please see your dealer.

A special fuel tank fitting plug tool is required for this procedure. Please see your dealer to obtain this tool.

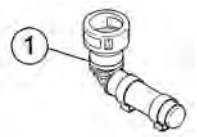

TOOL: PV-50567

Before beginning, be prepared to place the fuel tank in a secure location to avoid scratching the finish and to catch any fuel that may leak or drip from disconnected hoses or fittings.

1. Remove the seat. See the Seat Removal sections for details.
2. Lift the rear of the fuel tank filler pad ② to access the fuel tank bolts.

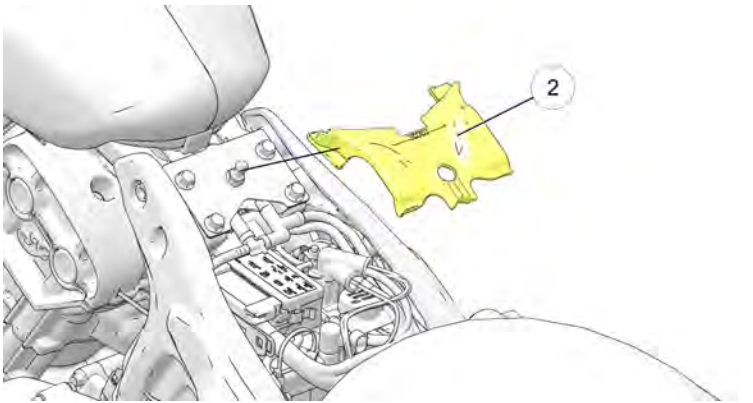

3. Remove the four (4) rear fuel tank bolts ③. Set hardware aside for reassembly.

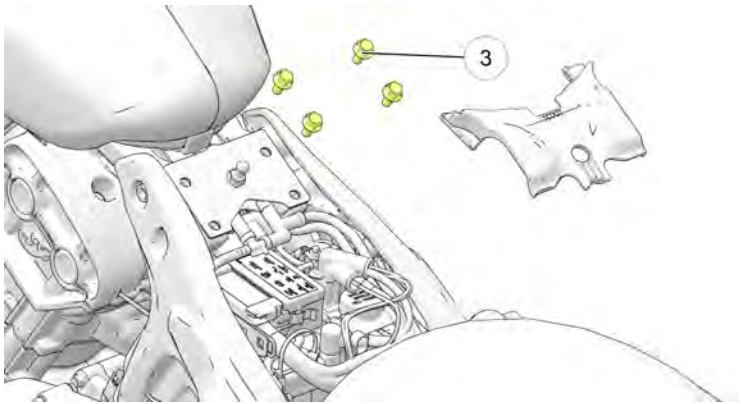

4. Locate the rubber elbow and the straight rubber coupler exiting the rear of the tank mounting bracket.

5. Gently pull the elbow free of the tube to disconnect the fuel tank vent line ④ (California and International models ⑥).

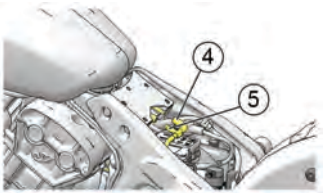



6. Gently pull the straight rubber coupler free of the tube to disconnect the fuel cap recess drain line ⑤ (California and International models ⑦).

7. Place the handlebars in the straight ahead position. Cover the front of the fuel tank with a protective cloth to prevent contact with the instrument cluster, which could cause damage.

8. Lift and support the rear of the tank approximately two inches (5 cm).

9. Disconnect the fuel pump electrical connector ⑨ by depressing the release tab on the connector body.

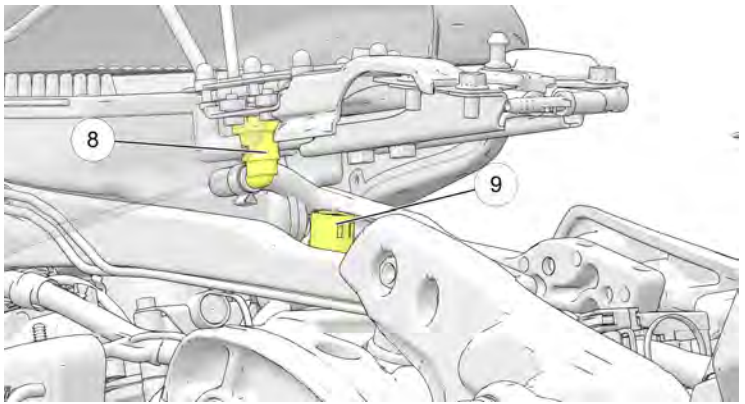

10. Wrap a shop towel around the fuel fitting.

11. Disconnect the fuel supply line connector ⑧ from the fuel pump by squeezing the release tabs on both sides of the fitting.

12. Install the fuel tank fitting plug tool ① onto the fuel pump fitting to protect the fitting and prevent fuel from seeping out of the tank.



13. Lift the rear of the fuel tank and *carefully* slide it rearward to release it from the front isolators.

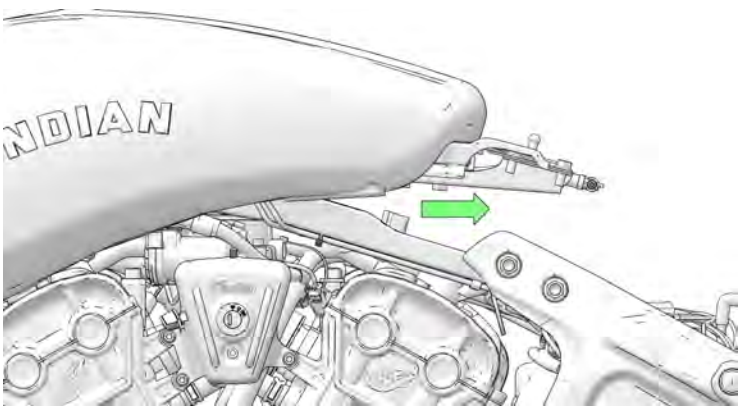

14. Lift the tank up and away from the frame. Reinstall the front isolators if they become dislodged.

15. Place the fuel tank on a flat surface in a secure location.

FUEL TANK INSTALLATION

1. Place the handlebars in the straight ahead position. Cover the front of the fuel tank with a protective cloth to prevent damage.
2. Make sure the front isolators are installed to the frame. Apply alcohol, soapy water or rubber lubricant to the isolators and to the sides of the air box seal to ease tank installation.
3. Using care to avoid damage to the fuel tank fitting and special tool, lower the fuel tank onto the frame of the motorcycle. Slide the tank forward to make sure it's fully seated on the isolators.

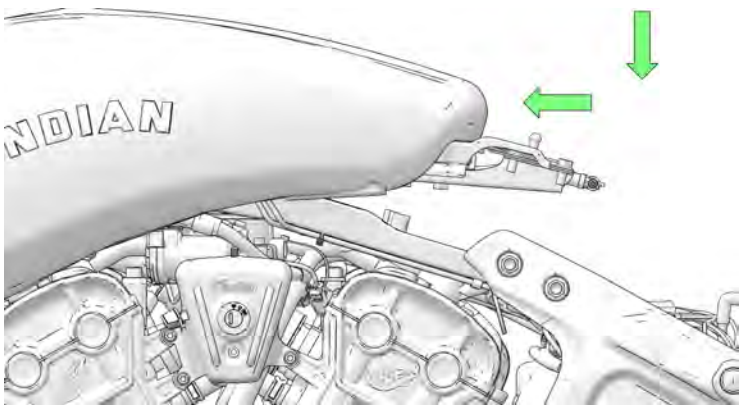

4. Pivot the rear of the tank upward to access the tank bottom. Support the rear of the tank in this position.
5. Remove the plug tool from the fuel pump fitting.
6. Reconnect the fuel supply line connector ① to the fuel pump. Make sure you hear a click to indicate proper engagement. Test the connection by pulling the fuel line lightly.

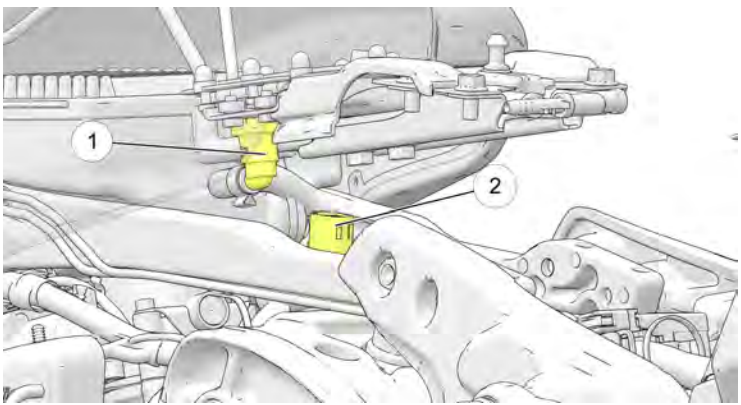

7. Connect the fuel pump harness electrical connector ②. Make sure you hear a click to indicate proper engagement.
8. Verify that the fuel line is correctly routed and secured.

9. Slide the tank forward to make sure it's fully seated on the isolators.
10. Connect the fuel tank vent line ④ (California and International models ⑤).

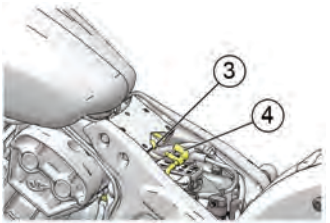

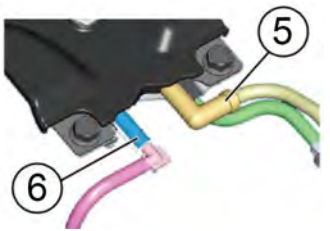

11. Connect the fuel cap recess line ③ (California and International models ⑥).
12. Reinstall the fuel tank filler pad ⑦.

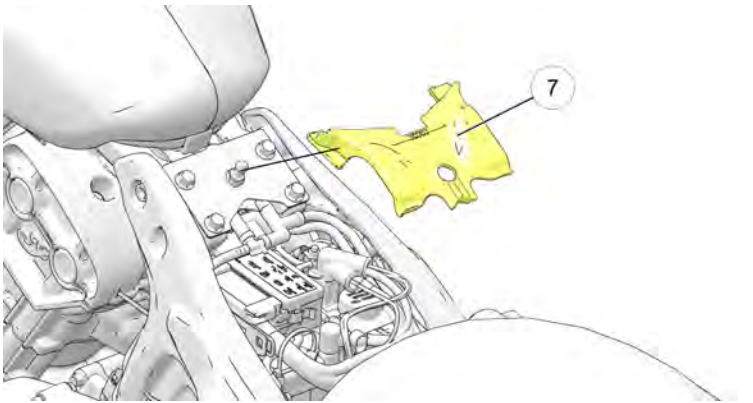

13. Reinstall the four (4) rear fuel tank bolts ⑧.

TORQUE: 18 ft-lbs (24.4 Nm)

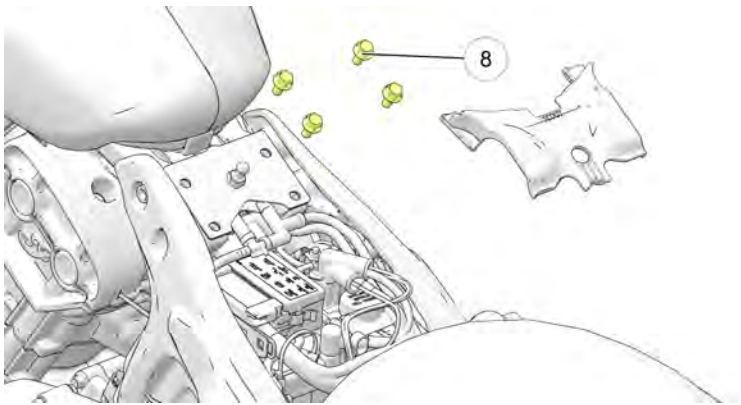

14. Prime the fuel pump. See page 62.

15. Check for leaks.

16. Reinstall the seat. See the Seat Removal section for details.

REAR DRIVE BELT CLEANING

Cleaning the drive belt will maximize belt and sprocket life and minimize drive line noise. Clean the belt at every tire change. Clean the belt more often if riding in dirty, dusty or high debris environments.

1. Mix a few drops of mild dish soap with a cup of warm water.
2. Use a soft nylon brush to clean the belt and sprocket teeth with the soapy water. Clean well in corner areas where road debris and belt dust can collect.
3. Rinse the belt with clear water, then dry thoroughly.

REAR DRIVE BELT WEAR ANALYSIS

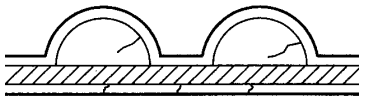	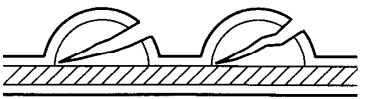	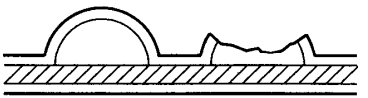	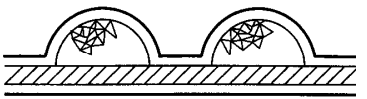
Internal tooth cracks (hairline) or cracks in backing (but not through core): OK to run, but monitor condition	External tooth cracks: Replace belt	Missing teeth: Replace belt	Chipping (not serious): OK to run, but monitor condition
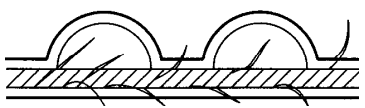	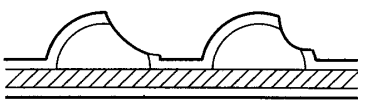	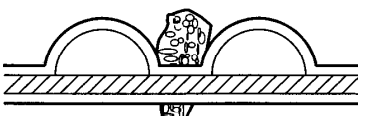	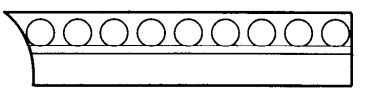
Fuzzy edge cord: OK to run, but monitor condition	Hook wear: Replace belt	Stone damage: Replace belt if damage is on edge	Bevel wear (outboard edge only): OK to run, but monitor condition

REAR DRIVE BELT CONDITION

Inspect the rear drive belt at the intervals specified in the Periodic Maintenance Table. Shallow cracks on the back side of the belt (side opposite the teeth) should be monitored for other damage but are not cause for belt replacement. The belt should be replaced if it is frayed, has broken teeth, or has cracks extending through the core strands. No matter its condition, the drive belt should be replaced at periodic intervals. See the *INDIAN MOTORCYCLE Service Manual* or an authorized INDIAN MOTORCYCLE dealer or other qualified dealer.

Replace the drive belt and both sprockets as a set if the drive belt has over 5,000 miles (8,000 km) of service at the time of damage or failure.

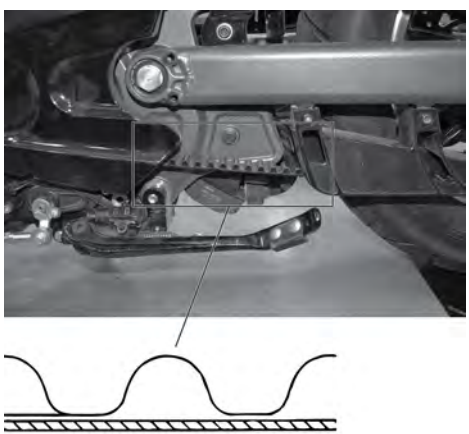

REAR SHOCK PRELOAD (RIDE HEIGHT) INSPECTION

Periodically measure rear shock preload. Have an assistant help with this procedure.

For the most comfortable ride and proper ground clearance, adjust preload if ride height is out of specification.

1. Verify that tire pressure is at specification. See page 53.
2. Load the motorcycle with all intended cargo. Wearing your riding gear, bring the motorcycle to the upright position and sit on the operator's seat. If you plan to carry a passenger, have the passenger (with riding gear) sit on the passenger seat.

⚠ WARNING

Do not carry a passenger unless the motorcycle is equipped with passenger seat and passenger footrests.

3. Measure shock preload from upper mount bolt center to lower mount bolt center (eye-to-eye) ①. Perform this measurement on both shocks.
4. Ride height should be 275 mm on both shocks. If the measurement differs, adjust the preload. See the *Rear Shock Preload (Ride Height) Adjustment* section for details.

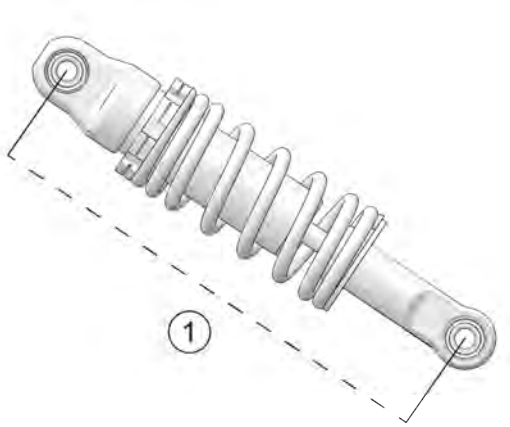

REAR SHOCK PRELOAD (RIDE HEIGHT) ADJUSTMENT

Special tools are required to perform this procedure. See the INDIAN MOTORCYCLE Service Manual or your authorized INDIAN MOTORCYCLE dealer or other qualified dealer.

⚠ WARNING

Uneven adjustment may cause poor handling of the motorcycle, which could result in an accident. Always adjust both the left and right shock preload equally, or have your dealer perform the adjustments.

1. Verify that tire pressure is at specification. See page 104.
2. Rest the motorcycle on the sidestand.
3. Ensure threads are clear of all dirt and debris before loosening the lock nut①. Loosen the lock nut by turning it counter-clockwise (as viewed from the top of shock) with the spanner wrench. The upper spanner nut on the shock is the lock nut. The lower spanner nut is the adjuster nut ②.

⚠ WARNING

Ensure threads on shock body are clean and clear of debris before adjusting the spanner nuts. Before attempting to adjust downward, spin the spanner nuts one full revolution upward and then adjust in the downward position.

4. Spray a light lubricant on the adjuster nut where it contacts the spring. DO NOT allow spray to contact the drive belt.

5. Adjust shock preload by rotating the adjuster nut clockwise (as viewed from the top of shock) to INCREASE preload ③ (firm) or counter-clockwise to DECREASE preload ④ (softer).



6. Recheck the preload measurement after adjusting.
7. Tighten the lock nut securely against the adjuster nut.

SWING ARM/REAR AXLE INSPECTION

1. Sit in the operator's seat and slowly bounce the rear suspension a few times. Make sure the suspension moves freely without binding. Listen for abnormal noises.
2. Elevate and support the motorcycle with the rear tire slightly off the floor. See the Elevating the Motorcycle section for details.

⚠ CAUTION

Make sure the motorcycle is stable when elevated. Personal injury and/or damage to the vehicle may occur if the motorcycle tips or falls.

3. Grasp the rear wheel and attempt to move the wheel side-to-side. If there is movement at the front of the swingarm or in the axle area, see your dealer for service.
4. With the transmission in neutral, slowly rotate the rear wheel. If the wheel does not rotate smoothly, see your dealer for service.

FRONT FORK/SUSPENSION INSPECTION

1. Place the motorcycle on the sidestand and inspect the front forks. If fork oil is present on the outer tube ①, *do not ride the motorcycle.* See your dealer for service before operating. If fork oil is present around the fork seals ② or inner tubes ③, replace the fork seals.

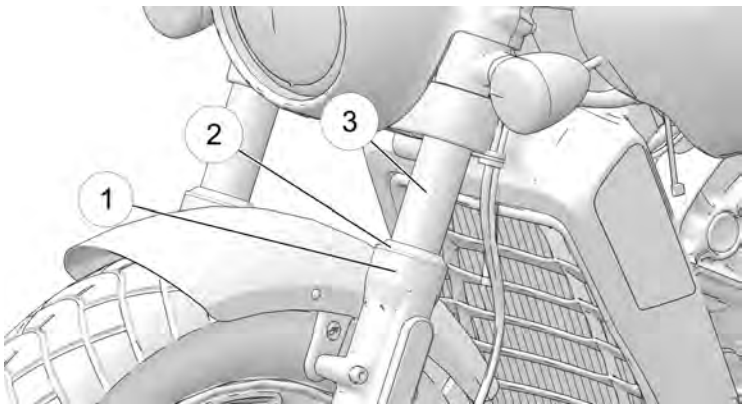

2. Clean the fork tubes to remove bugs, tar or buildup which may cause seal wear or leakage. Inspect the outer surfaces of the inner fork tubes for scratches or damage from foreign objects.
3. Straddle the motorcycle and bring it to the fully upright position. Apply the front brake and push downward (hard) on the handlebars several times. The front suspension should operate smoothly and quietly.
4. Fork oil condition and level affects front suspension performance and internal component wear. Replace fork oil at the recommended intervals. Special tools are required to perform this procedure. See the *INDIAN MOTORCYCLE Service Manual* or an authorized INDIAN MOTORCYCLE dealer or other qualified dealer.

STEERING HEAD INSPECTION

1. Elevate and support the motorcycle with the front tire slightly off the floor. See the Elevating the Motorcycle section for details.

⚠ CAUTION

Make sure the motorcycle is stable when elevated. Injury may occur if the motorcycle tips or falls.

2. Turn the handlebars from stop to stop. The action should be smooth but not loose. Make sure wires, hoses and control cables do not interfere with smooth steering.
3. Position the front wheel straight ahead. Grasp the front forks near the front axle and attempt to move the wheel front-to-back. If there is front-to-back movement at the steering head, see your dealer for service.

4. If steering binds, feels rough or uneven, or if movement is detected at the steering stem, see your dealer for service.
5. Rotate the front wheel and inspect for smooth rotation of front wheel bearings. If roughness or unusual sounds are present, see your dealer for service.
6. Turn handle bars full right or left and hold against the fork stop. Attempt to move front wheel side-to-side. If movement is observed, see your dealer for service.

CRANKCASE BREATHER HOSES

Inspect the crankcase breather (vent) hoses ① each time the fuel tank is removed to perform air filter service or other maintenance. Inspect both breather hoses along their length and at both ends. Make sure hoses are not restricted, kinked, cracked or otherwise damaged. Replace any worn or damaged hoses.

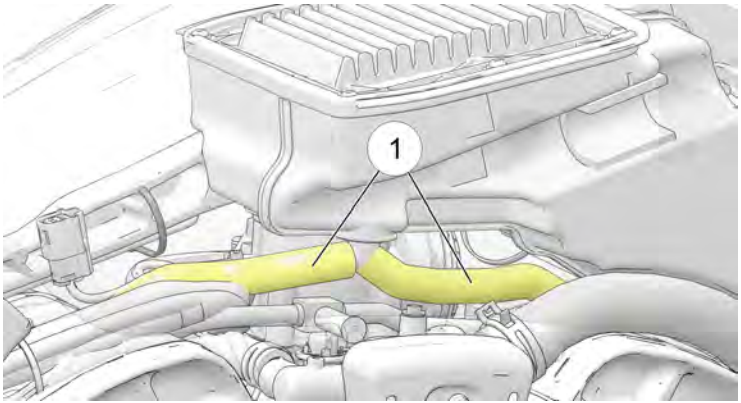

EVAPORATIVE EMISSION CONTROL SYSTEM (CALIFORNIA AND INTERNATIONAL MODELS)

1. Inspect all evaporative emission control system hoses and connections. Make sure all connections are tight and locked.
2. The canister ① is located under the mid frame. Make sure it is securely fastened to the mounting bracket.
3. Inspect connections at the evaporative emissions canister to be sure they are secure.

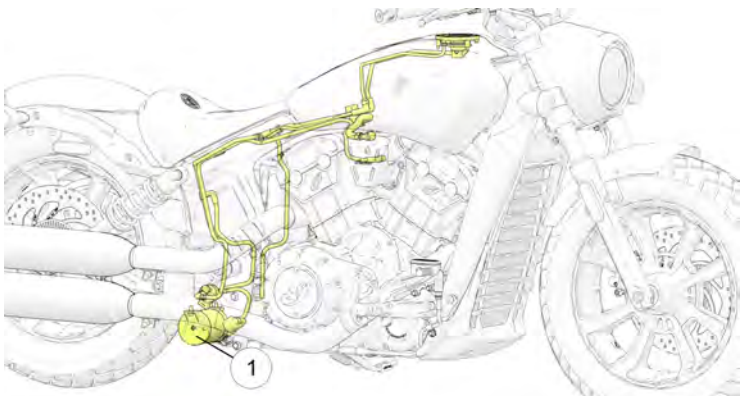

FUEL SYSTEM COMPONENTS

1. Inspect fuel hoses for cracks or damage.
2. Inspect hose connections at the fuel tank and at the fuel rail for dampness or stains from leaks.
3. The fuel system is under pressure and caution must be used when inspecting and servicing the fuel system. See the *INDIAN MOTORCYCLE Service Manual* or an authorized INDIAN MOTORCYCLE dealer or other qualified dealer.

THROTTLE CONTROL INSPECTION

1. With the engine OFF, rotate the throttle control grip fully open and then release it. It should rotate smoothly from the rest position to the completely open position. It should return to the rest position quickly when released.
2. Repeat the twist and release process with the handlebars turned fully *right* and fully *left*.
3. Service the throttle system if throttle operation is not smooth or if throttle grip does not return properly. See the *INDIAN MOTORCYCLE Service Manual* or an authorized INDIAN MOTORCYCLE dealer or other qualified dealer.

SIDESTAND LUBRICATION

Periodically lubricate the sidestand bushing. See page 57 for sidestand inspections.

MECHANICAL CLUTCH LEVER FREEPLAY

1. The clutch cable adjuster nut ① is located along the lower right frame. While holding the clutch cable, slide the rubber protective cover away from the lock nut. Loosen the lock nut.

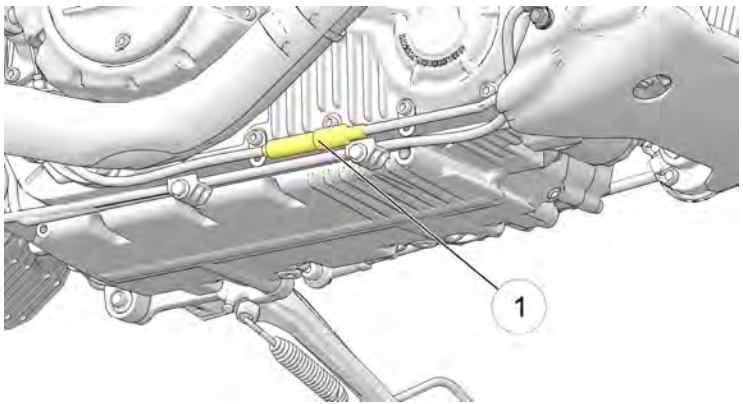

2. While holding the cable, turn the cable adjuster inward or outward until clutch lever freeplay is 0.5 mm - 1.5 mm (.02 in - .059 in)②.

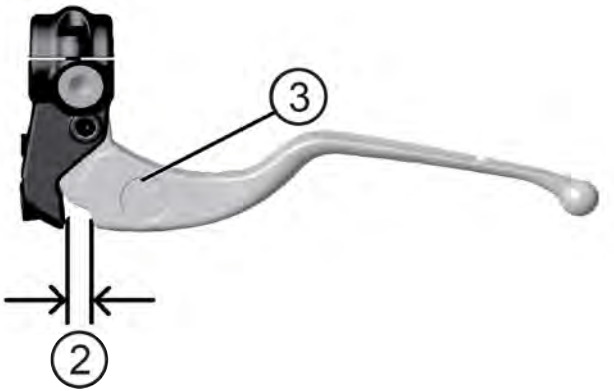

3. While holding the cable, tighten the adjuster lock nut securely.
4. Verify that the safety switch activates properly. The engine should not start in gear with the clutch lever ③ released.

TIP
The starter interlock switch is dependent on the clutch lever freeplay being set correctly to ensure activation of the clutch safety switch.

MECHANICAL CLUTCH LEVER LUBRICATION

1. Remove the clutch lever pivot nut ① and screw ②. Disconnect the clutch cable ③ from the clutch lever.

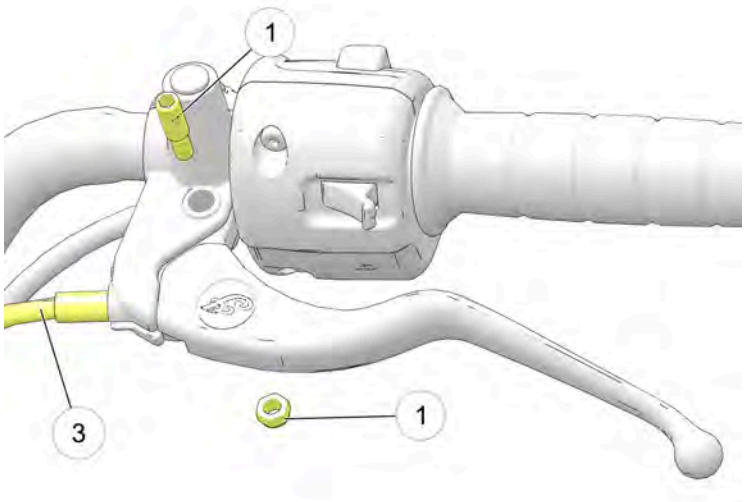

2. Remove any old grease and dirt from the lever and housing. Lubricate the clutch lever and pivot screw with moly assembly grease or all-purpose grease.
3. Reconnect the clutch cable. Hold the screw down and tighten the nut.

TORQUE: 96 in-lbs (10.8 Nm)

4. Adjust clutch lever freeplay. See page 93.
5. Tighten the adjuster nut and slide the protective cover over the adjuster.

MECHANICAL CLUTCH CABLE LUBRICATION

Lubricate control cable barrel ends at the intervals recommended in the Periodic Maintenance Table.

NOTICE
The clutch cable is factory-lubricated. Additional lubrication could be detrimental to cable performance. Replace the clutch cable assembly if binding or sticking occurs. DO NOT lubricate between the cable and sheath.

Verify proper routing and smooth movement. Inspect for damage to the external casing, and inspect exposed cable wire for fraying, kinks or corrosion. Replace any damaged, sticky or sluggish cable.

1. Disconnect the cable at the clutch lever and at the primary cover.
2. Lubricate the barrel ends ① with all-purpose grease.

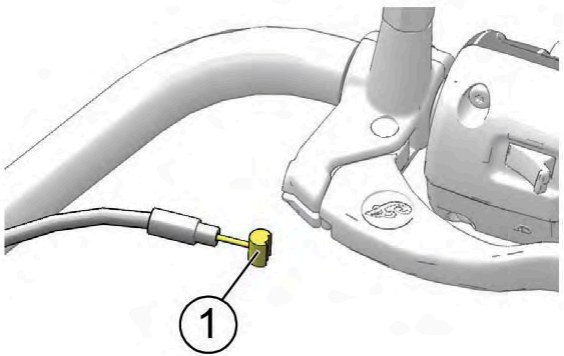

3. Reconnect the cable and adjust freeplay as needed.

REAR BRAKE PEDAL

1. Lubricate the pivot bushing at the intervals recommended in the Periodic Maintenance Table. Also lubricate any time binding is evident. Use all-purpose grease.
2. Inspect brake pads as outlined in the Brake Disc Inspection / Cleaning section.

BRAKE HOSES/CONNECTIONS

Inspect all brake hoses and connections for dampness or stains from leaking or dried fluid. Tighten any leaking connections and replace components as necessary. See the *INDIAN MOTORCYCLE Service Manual* or an authorized INDIAN MOTORCYCLE dealer or other qualified dealer.

BRAKE FLUID PRECAUTIONS

⚠ WARNING

Using the wrong fluid or allowing air or contaminants into the fluid system can damage the system seals or result in a malfunction that could lead to serious injury or death. Use only DOT 4 brake fluid from a sealed container.
Do not operate the front brake with the reservoir cover removed. Fluid could overflow from the reservoir and allow air to enter the system. Air in the brake system could cause the brakes to malfunction.
An over-full reservoir may cause brake drag or brake lock-up, which could result in serious injury or death. Maintain brake fluid at the recommended level. Do not overfill.

NOTICE

Brake fluid will damage painted surfaces and plastic parts. Always clean spilled brake fluid immediately with water and a mild detergent.

REAR BRAKE FLUID

Change the brake fluid at the intervals recommended in the Periodic Maintenance Table section. Always add brake fluid from a new, unopened container. Always use the recommended fluid. See page 135.

1. Position the motorcycle on level ground in the fully upright position.
2. The rear brake fluid reservoir is located near the rear brake pedal. View the reservoir from the right side of the vehicle.
3. Wipe the fluid container and the area around the reservoir cover with a clean cloth.
4. If the fluid level is low, inspect brake pads as outlined on page 98. If pads are not worn beyond the service limit, inspect the brake system for leaks.
5. Remove the cover and diaphragm. The fluid level should be above the minimum indicator mark on the reservoir body ①. Add brake fluid as needed. *Do not overfill.*

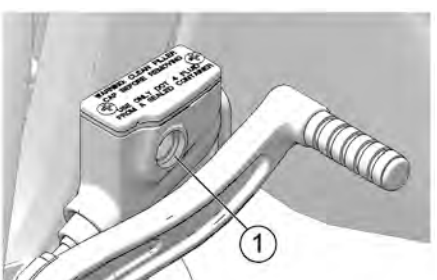

6. Reinstall the cover and diaphragm. Tighten the cover screws.

TORQUE: 13 in-lbs (1.5 Nm)

7. Wipe away any fluid spills. Check for signs of brake fluid leaks around hoses, fittings, reservoir, and brake calipers.

FRONT BRAKE LEVER

1. To lubricate the front brake lever, start by removing the plastic cap ④ from the pivot pin ①. Unscrew the bottom nut ③ and pivot pin to access the hinge point ②.
2. Lubricate the pivot pin and brake lever hinge point at the intervals recommended in the *Periodic Maintenance Table* section. Also lubricate any time binding is evident. Use all-purpose grease.

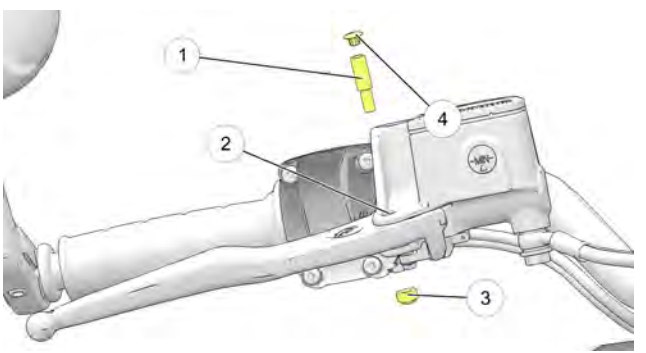

3. Inspect brake pads as outlined on page 98.
4. Once properly lubricated, reinstall the components in accordance with their proper torque values. Return plastic cap to the top of the pivot pin.

TORQUE: Pivot Pin: 8.9 — 17.7 in-lbs (1–2 Nm)

TORQUE: Nut: 35.4 — 62 in-lbs (4–7 Nm)

FRONT BRAKE FLUID

Change the brake fluid at the intervals recommended in the *Periodic Maintenance Table* section.

Do not attempt to change the anti-lock brake system fluid. Please see your dealer for this service.

Always add brake fluid from a new, unopened container. Always use the recommended fluid. See page 135.

1. Position the motorcycle on level ground in the fully upright position. Position the handlebars so that the fluid reservoir is level. Wipe the fluid container and the area around the reservoir cover with a clean cloth.
2. If the fluid level is low, inspect brake pads as outlined on page 98. If pads are not worn beyond the service limit, inspect the brake system for leaks.
3. To add fluid, remove the reservoir cover screws. Remove the cover ① and diaphragm ②.

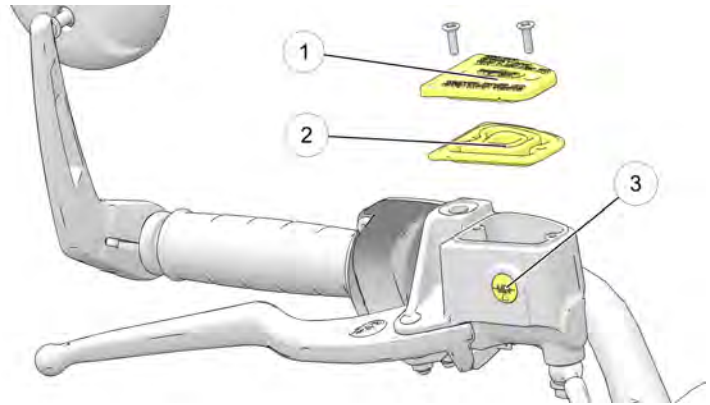

4. The fluid level should be above the minimum indicator mark in the sight glass ③. Add brake fluid as needed. *Do not overfill.*
5. Reinstall the diaphragm, cover and screws.

TORQUE: 13 in-lbs (1.4 Nm)

6. Wipe away any fluid spills. Check for signs of brake fluid leaks around hoses, fittings, reservoir and brake calipers. Check for deterioration of hoses.

BRAKE PADS

Inspect each front brake pad on both sides of the front disc.
Inspect each rear brake pad on both sides of the rear disc.

When checking brake pad friction material thickness, check each brake caliper for dampness or stains from leaking or dried brake fluid. If inspection reveals signs of fluid leakage, do not operate the vehicle. See your dealer for service.

Use an inspection mirror, positioned at the front side of the caliper, to view the friction material.

Replace brake pads when the thinnest point of the friction material has worn to 1.0 mm ①. Please see your dealer for this service.

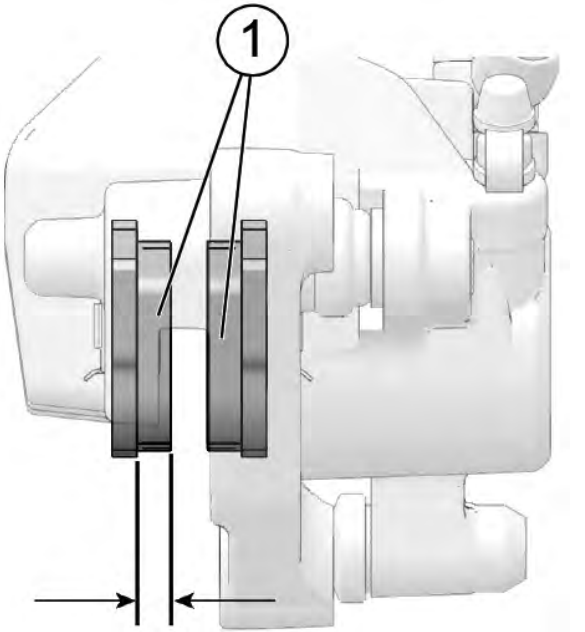

TIP
After replacing pads, allow up to 250 miles (500 km) of operation in urban driving conditions (not highway cruising) to allow pads to mate with new rotors. Brakes should be used frequently. During this time brake performance will be less effective. Avoid using brakes harshly unless in an emergency. Brake efficiency will gradually increase during this seating period.

BRAKE DISC INSPECTION / CLEANING

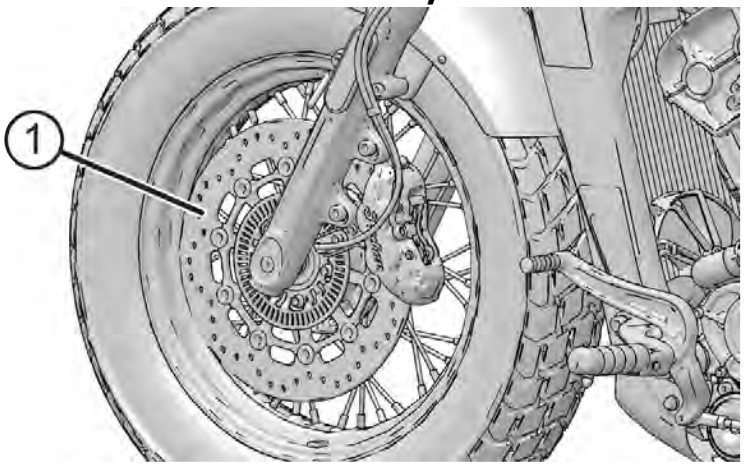

1. Inspect brake discs ① for nicks, scratches, cracks or other damage. Inspect the thickness of each brake disc at four or more locations around the disc. If any disc is worn to the minimum thickness at the thinnest point, or if a disc is damaged, see your dealer for replacement.
2. Clean discs if minor squeaks develop due to dirt or dust. Apply brake cleaner to a clean shop towel and wipe the discs. DO NOT allow brake cleaner to contact painted or plastic parts. Read all precautions on the label.

NOTICE

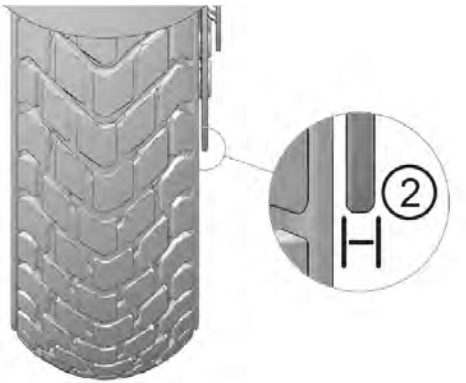

② **Minimum Thickness (Front):** 4.5 mm

ANTI-LOCK BRAKE SYSTEM (ABS) TONE RING/SENSOR INSPECTION (IF EQUIPPED)

1. Visually inspect for damaged teeth on the front and rear ABS tone rings ①. Inspect for nicks and dents on the face of the teeth. The teeth edges should be consistent in appearance. If a tone ring is damaged, see your dealer for replacement as soon as possible.

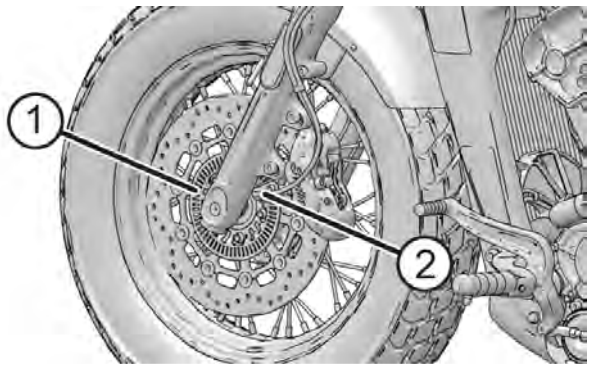

2. Inspect for debris adhering to the end of the wheel speed sensors ②. If contamination is observed, or if you are unable to visually inspect, slide a thin towel across the face of the sensor between the sensor and the tone ring to remove any potential debris.

SPARK PLUGS

See your dealer for spark plug inspections and replacement at the intervals specified in the Periodic Maintenance Table.

SPARK PLUG SPECIFICATIONS	
Spark Plug Type	NGK MR7F
Spark Plug Gap	.030 in (0.80 mm)
Spark Plug Torque	7.5 ft-lbs (10 N·m)

WHEEL INSPECTION

Inspect both wheels for cracks or damage and replace damaged wheels promptly. Do not operate the motorcycle if wheels are damaged or cracked. See the *INDIAN MOTORCYCLE Service Manual* or an authorized INDIAN MOTORCYCLE dealer or other qualified dealer.

WHEEL ALIGNMENT

Inspect rear wheel alignment at regular service intervals, whenever the rear wheel is removed and when the rear drive belt is adjusted. Please see your dealer for this service.

FRONT WHEEL INSTALLATION

If the front wheel is removed for any reason, it must be reinstalled in the correct rotating direction.

Clean all wheel components before installation. Apply a light coat of all-purpose grease to the axle and both spacers.

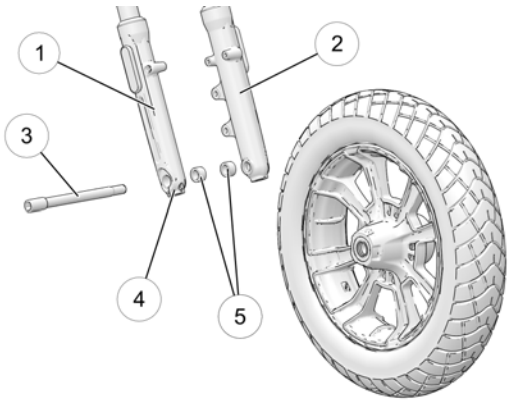

① Right Fork Tube
② Left Fork Tube
③ Axle Bolt 52 ft-lbs. (70 Nm)
④ Pinch Bolt 18–19 ft-lbs. (24.4–25.7 Nm)
⑤ Wheel Spacers

TIRES

⚠ WARNING

Operating the motorcycle with incorrect tires, incorrect tire pressure or excessively worn tires could cause loss of control or accident. Under inflation can cause a tire to overheat and result in a tire failure. Only use tires approved by INDIAN MOTORCYCLE for the model of the motorcycle. See your dealer for more information. Use of unapproved or an improperly mixed front and rear tire can result in decreased handling performance and stability, potentially leading to reduced control of the motorcycle. Always maintain proper tire pressure as recommended in the rider's manual and on safety labels.

TIRE REPLACEMENT

Tires, rims, innertubes and air valves must be correctly matched to wheel rims. Use only the proper size tires specified with the same or higher load ratings. INDIAN MOTORCYCLE-recommended tires provide proper clearance between fenders, swingarm, drive belts and other components. See the Specifications section for details.

On models equipped with innertubes, innertubes MUST be replaced with new innertubes when tires are replaced. Use only the proper size innertubes.

⚠ WARNING

Mismatched tires, rims and air valves may result in damage to the tire bead during mounting or may allow the tire to slip off the rim, possibly resulting in tire failure.

TIRE CONDITION

Inspect the tire sidewalls, road contact surface, and tread base for cuts, punctures, and cracking. Replace damaged tires immediately. See the *INDIAN MOTORCYCLE Service Manual* or an authorized INDIAN MOTORCYCLE dealer or other qualified dealer.

TIRE TREAD DEPTH

Replace any tire with a tread depth of less than 1/16 in (1.6 mm).

Tread wear indicators are located in at least three places on the tread circumference and become visible at a tread depth of approximately 1/16 in (1.6 mm). The tread wear indicators appear as a solid band across the tread.

You may also use a depth gauge or an accurate ruler to measure the depth of the center tire tread on both front and rear tires.

TIRE PRESSURE

Always check and adjust tire pressure when tires are cold. Do not adjust tire pressure immediately after riding. Wait at least 3 hours after riding to check pressure. If pressure checked and adjusted while tires are warm, the pressure will drop as tires cool and result in underinflation.

Adjust tire pressure as recommended for the total weight of your intended load (see chart below). For more information, refer to the manufacturing information label located on the front frame downtube. See page .

WARNING

Do not exceed the maximum recommended inflation pressure to seat the bead. Tire or rim failure may result.

TIRE PRESSURES

LOCATION	SIZE	BRAND	TYPE	RECOMMENDED PRESSURE	
				LOADS UP TO 200 LBS. (91 KG)	LOADS UP TO VEHICLE'S MAXIMUM LOAD CAPACITY
Scout Bobber and Scout Bobber Twenty					
Front	130/90B16 67H	Pirelli	MT60RS	36 psi (248 kPa)	36 psi (248 kPa)
Rear	150/80B16 77H	Pirelli	MT60RS	40 psi (276 kPa)	40 psi (276 kPa)
Scout Bobber Sixty (North America)					
Front	130/90-16 72H	Kenda	K673F	36 psi (248 kPa)	36 psi (248 kPa)
Rear	150/80-16 71H	Kenda	K673	40 psi (276 kPa)	40 psi (276 kPa)
Scout Bobber Sixty (non-North America)					
Front	130/90B16 67H	Pirelli	Night Dragon	36 psi (248 kPa)	36 psi (248 kPa)
Rear	150/80B16 77H	Pirelli	Night Dragon	40 psi (276 kPa)	40 psi (276 kPa)

SEAT REMOVAL – SCOUT BOBBER AND BOBBER SIXTY

TIP

Use caution to avoid contact with the fuel tank when removing the seat.

1. Grasp the front edge of the seat and pull upward abruptly to disengage the seat base grommet from the seat mount stud①.

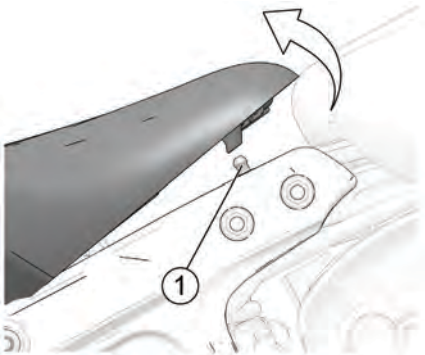

2. Lift the seat to disengage the seat base from the rear frame.
3. To reinstall the seat, make sure the tabs on the seat base fully engage the rear frame section, then press downward firmly at the front edge of the seat to snap the stud to the seat base grommet.

⚠ WARNING

If the seat is not aligned in a straight-ahead position, the grommet is not engaged to the stud. Make sure the grommet is fully engaged to the stud before operating.

SCOUT BOBBER TWENTY

NOTICE

Use caution to avoid contact with the fuel tank when removing the seat.

1. Remove the two bolts ① holding the seat to the seat frame using the included uni-tool.
2. Remove the four bolts ② holding the seat frame to the bike.
3. If trying to access the battery, remove the two bolts ③ holding the cover to the bike.

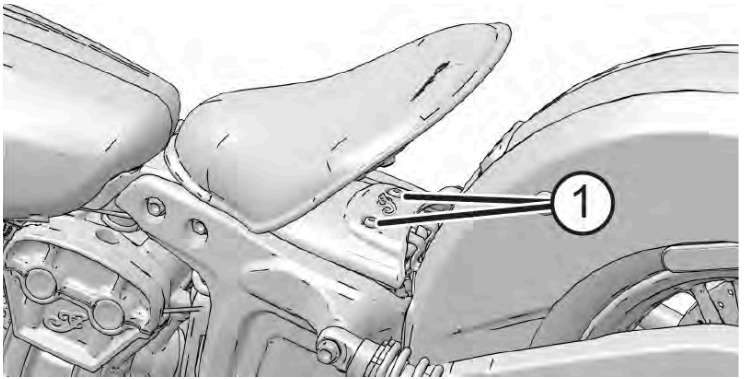
1

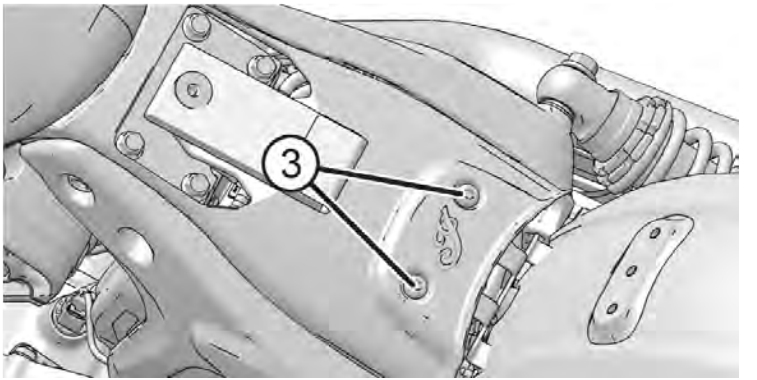
3

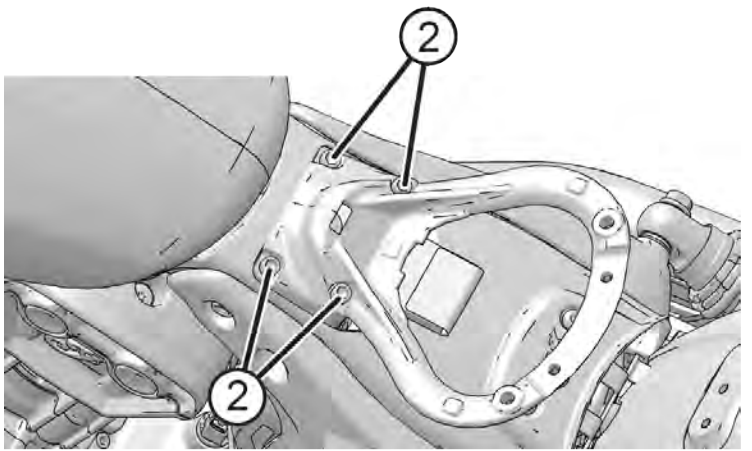
2
2

HEADLIGHT AIM INSPECTION

On LOW beam, the horizontal cut-off of the light beam ① should be 4 in. (10 cm) lower than the center of the headlamp bulb and centered straight ahead at 32 ft. 10 in. (10 m).

1. Verify that tire pressure is at specification. See the Tire Pressure section for details.
2. Verify that rear suspension ride height (preload) is at specification. See the Rear Shock Preload (Ride Height) Inspection section for details.
3. Position the motorcycle on a level surface with the headlight 32 ft. 10 in. (10 m) from a wall.
4. With the operator and passenger (if applicable) on board, bring the motorcycle to the fully upright position.
5. Start the engine and switch the headlamp to low beam. Observe the headlight aim on the wall.
6. Make any necessary adjustments to headlight aim.

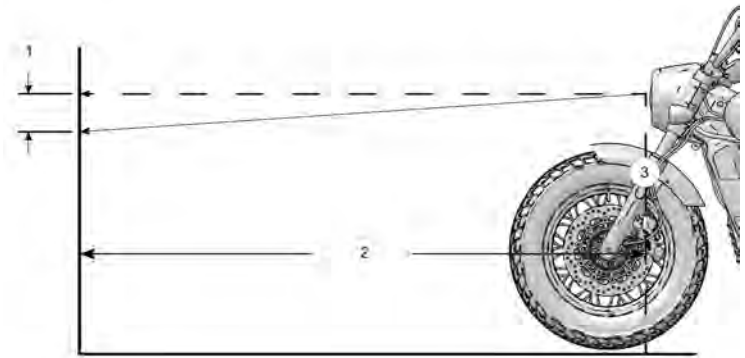

NUMBER	DESCRIPTION
①	4 in (10 cm) to top cut-off of beam
②	Measure distance = 32 ft 10 in (10.0 m)
③	Headlight Center

HEADLIGHT AIM ADJUSTMENT

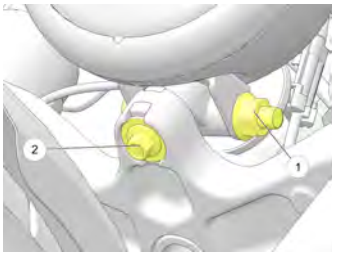

1. To adjust the headlamp vertically, loosen the housing mount fastener ① and pivot the housing upward or downward. Tighten the fastener.

TORQUE: 35 ft-lbs (47.5 Nm)

2. To adjust the headlamp horizontally, loosen the headlight mounting bolt ② and pivot the headlight to the left or right. Tighten the bolt.

TORQUE: 18 ft-lbs (24.4 Nm)

HEADLIGHT LAMP REPLACEMENT

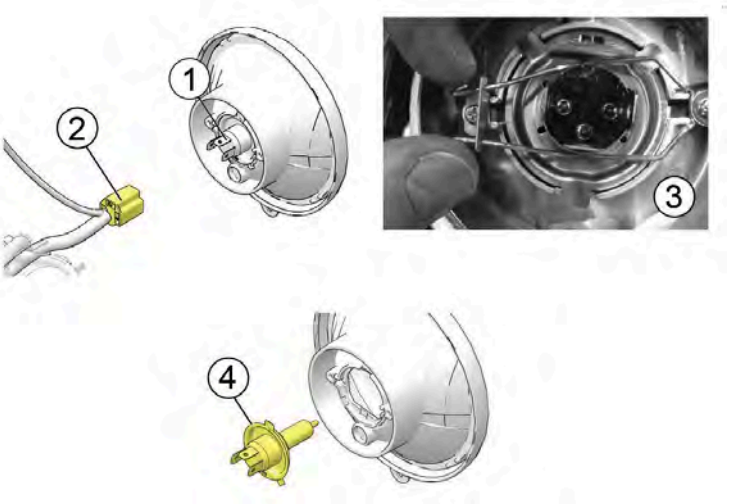

1. The headlight bulb ① can be serviced and removed from the back of the headlight bucket without disassembling the headlight lamp.
2. Disconnect the wire harness ②.
3. Remove the rubber boot from the rear of the headlight.

4. Squeeze the bulb retainer ③ and move it away from the bulb. Remove the bulb.

NOTICE
Avoid touching a halogen lamp with bare fingers. Oil from your skin leaves a residue, causing a hot spot that will shorten the life of the lamp. If a lamp is touched, clean it thoroughly with denatured alcohol.

5. Install the new bulb ④ and secure the retainer.
6. Reinstall the rubber boot, making sure it seals around the bulb and headlight.
7. Connect the wire harness.

BATTERY

The motorcycle battery is a sealed, maintenance-free battery. Do not remove the battery cap strip for any reason. Keep the battery connections clean and tight at all times.

⚠ WARNING

Battery electrolyte is poisonous. It contains sulfuric acid. Serious burns can result from contact with skin, eyes or clothing.
External: Flush with water.
Internal: Drink large quantities of water or milk. Follow with milk of magnesia, beaten egg, or vegetable oil. Call physician immediately.
Eyes: Flush with water for 15 minutes and get prompt medical attention.
Batteries may produce explosive gases.

- Keep sparks, flame, cigarettes, etc. away.
- Ventilate when charging or using in an enclosed space.
- Always shield eyes when working near batteries
- KEEP OUT OF REACH OF CHILDREN.

BATTERY REMOVAL

⚠ WARNING

Improperly connecting or disconnecting battery cables can result in an explosion and cause serious injury or death. When removing the battery, always disconnect the negative (black) cable first. When reinstalling the battery, always connect the negative (black) cable last.

1. Remove the seat. See the Seat Removal / Installation section for details.
2. Remove the fuse box from the frame of the motorcycle. Use care to avoid pulling or stretching wires. See page 116. Fold the wires to the right rear side of the motorcycle.
3. Remove the battery hold-down strap. **Tool:** 13 mm ratchet
4. Remove the negative (-) battery cable ① from the battery terminal. Position the cable well clear of the terminal. **Tool:** 10 mm wrench

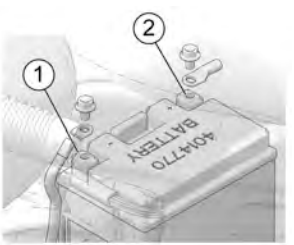

5. Remove the rubber cover from the positive (+) battery cable and remove the cable ② from the terminal. Position the cable well clear of the terminal.
6. Tilt the battery slightly rearward, then lift it away from the motorcycle.

BATTERY INSTALLATION

⚠ WARNING

Improperly connecting or disconnecting battery cables can result in an explosion and cause serious injury or death. When removing the battery, always disconnect the negative (black) cable first. When reinstalling the battery, always connect the negative (black) cable last.

NOTICE

Do not remove the battery cables while the engine is running. Doing so may damage the Electronic Control Unit (ECM). Take great care not to reverse the battery leads when installing the battery. Reverse power applied to the ECM will damage it instantly.

1. Inspect the battery box for damage. Be sure pads are in good condition and properly located.
2. Make sure cable ends and battery terminals are clean. Apply a light film of dielectric grease to the terminal bolt threads.
3. Carefully position the battery into the battery box with the negative (-) terminal toward the front of the motorcycle.
4. Make sure the positive (+) cable is routed horizontally and perpendicular to the long side of the battery. Connect the positive (+) cable to the positive (+) battery terminal. Reapply the rubber protective cover over the top of the positive battery terminal.

TORQUE: 45 in-lbs (5 Nm)

5. Install the negative (-) ground cable last.

TORQUE: 45 in-lbs (5 Nm)

6. Reinstall the battery hold-down strap.

TORQUE: 96 in-lbs (10.8 Nm)

7. Reinstall the seat. See the Seat Removal / Installation section for directions.

BATTERY CHARGING

If your motorcycle will not be used for a period of four (4) weeks or longer, a maintenance charger should be connected to the battery. A maintenance charger can be purchased through your authorized INDIAN MOTORCYCLE dealer or other qualified dealer.

The Battery Charge Port/Heated Gear plug① is located behind the ignition switch cover.

⚠ CAUTION

Wait until engine components have cooled before handling the gear plug to avoid burns.

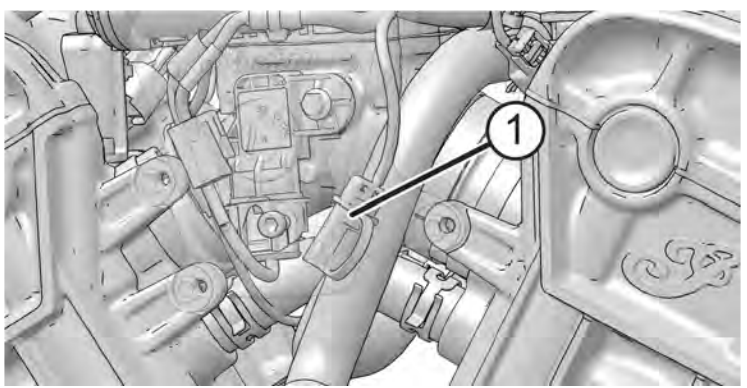

1. Following the charger manufacturer's instructions, use a battery charger designed for use with 12-volt batteries. The charger should have a maximum charging rate of 1.8 amps. Charge the battery for approximately 10 hours at a rate of 1.8 amps. If you use a taper or trickle charger, it will take longer to charge the battery.
2. After charging the battery, allow the battery to sit 1-2 hours before checking the state of charge with a DC volt meter. The charge should be a minimum of 12.5 DC volts. Repeat the charging cycle if the charge is less than 12.5 DC volts. Replace the battery if it fails to reach 12.5 volts after the second charge.

BATTERY CHARGING AND MAINTENANCE

IMPORTANT
Read and follow the safety precautions listed on the battery and the proper battery charging procedures outlined in the Owner's Manual.

AGM BATTERY CHARGER RECOMMENDATIONS

Indian Motorcycle recommends using the BatteryMINDer® 2012 AGM - 2 AMP battery charger (PN 2830438) to charge and maintain AGM batteries. The charger can be found on the Indian PG&A website. If not using the BatteryMINDer® 2012 AGM - 2 AMP battery charger, an automatic or constant monitoring AGM battery charger with a charging rate of 2 amps or less is recommended to prevent damage to the battery.

Batteries that fall below 12.5V run the risk of sulfation, a condition whereby sulfate crystals form inside the battery and significantly reduce performance. AGM chargers are designed specifically for charging AGM type batteries and use high frequency pulses to partially reverse sulfation.

IMPORTANT
The use of non-AGM battery chargers may result in a misleading "battery not found" or "open cell" fault message. Please ensure you are using the recommended AGM charger when charging AGM type batteries.

AGM BATTERY CHARGING RECOMMENDATIONS – LOW CHARGE

The nominal voltage for an Indian Motorcycle battery is 12.8 Volts when fully charged. The battery will self-discharge when disconnected from a vehicle, and will discharge at a faster rate when connected. If the battery voltage falls below 12.5V, it should be charged immediately using the recommended battery charger.

Batteries which are not connected to a vehicle should be inspected every 2-3 months. The battery must be charged if found to be below 12.5 volts.

Always use the recommended automatic battery charger, and wait for the charger to complete the charge cycle before disconnecting it.

AGM BATTERY CHARGING RECOMMENDATIONS – DEEPLY DISCHARGED (BELOW 3 VOLTS)

AGM batteries discharged to a voltage of 3 volts or less may not be recognized by the recommended automatic battery charger. (The minimum voltage threshold recognized by other battery chargers may be as high as 10.5 volts). Often times deeply discharged batteries can be restored by attaching another, fully-charged, battery to "jump start" the low battery. Follow the steps below to restore a deeply discharged battery.

1. Carefully connect the two batteries' positive terminals, then the negative terminals using jumper cables.
2. Connect the recommended battery charger to the low battery and initiate the charging sequence.

⚠ WARNING

Always check to ensure the positive cables are connected to the positive terminals before powering the charger on. Reversing polarity when charging can damage electrical components and risk personal injury. Be careful not to let battery cable clamps touch each other.

3. After the charging sequence has initiated, disconnect the fully-charged battery. Always disconnect the fully-charged battery positive first, followed by low battery positive, low battery negative, and finally fully-charged battery negative
4. Proceed with charging both batteries to full capacity. Listed in the table below are the approximate charging times for deeply discharged batteries. Always use the recommended automatic battery charger, and wait for the charger to complete the charge cycle before disconnecting it. The recommended automatic charger will indicate when the battery is fully charged on its display.

AGM BATTERY CHARGING RECOMMENDATIONS TABLE

STATE OF CHARGE	VOLTAGE (DC)	ACTION	RECOMMENDED CHARGE TIME*
100%	12.8-13.2 V	None	None Required
75%-100%	12.6-12.8 V	May need slight charge If no charge given, check again within 4 weeks	2-4 Hours
50%-75%	12.3-12.6V	Needs Charge	4-6 Hours
25%-50%	12.0-12.3V	Needs Charge	6-8 Hours
0%-25%	12.0V or less	Needs Charge	At Least 8 Hours
*Assuming 2 Amps constant current			

AGM BATTERY MAINTENANCE TIPS

1. If the motorcycle will not be driven for more than 2 weeks, maintaining the battery with the Battery Minder 2012-AGM charger (PN 2830438) is recommended.
2. To help prolong battery life, it is recommended to remove the battery from vehicles stored ONE month or longer. To maximize the life of stored batteries, they should be kept in a cool / dry location. Batteries will self discharge more rapidly when stored in extreme temperatures. Batteries should be maintained using the recommended battery charger while in storage.
3. Batteries will self-discharge more quickly when dirty. Periodic cleaning of the battery terminals using a terminal brush will help maximize battery life. Wash terminals with a solution of one tablespoon baking soda and one cup water. Rinse well with tap water and dry off with clean shop towels. Coat the terminals with dielectric grease or petroleum jelly.
4. Battery connections should be tightened to the correct torque during installation. This will reduce voltage drop and ensure a reliable connection between the regulator/rectifier and battery.

ELECTRICAL PRECAUTIONS

Be aware of the following precautions regarding the electrical system to avoid disruption of electrical signals and possible system malfunction.

- DO use ONLY genuine INDIAN MOTORCYCLE parts and accessories designed for your model, and follow the instructions provided.
- DO use the accessory power jack provided (if equipped).
- DO NOT splice or cut any wires.
- DO NOT tap in to any power or ground on the motorcycle unless specifically directed to do so by the INDIAN MOTORCYCLE instructions that come with the kit.
- DO NOT back-probe electrical connectors on the vehicle unless directed to do so by the *INDIAN MOTORCYCLE Service Manual*.
- DO NOT power any accessories from the diagnostic connector.

FUSE REPLACEMENT

The main vehicle fuse ① is located on the wiring harness at the rear of the battery. Remove the fuse cap to inspect or replace this fuse. On ABS models, there is an additional ABS fuse located next to the main vehicle fuse.

NOTICE
Use fuses with the recommended amperage to avoid damage to the electrical system.

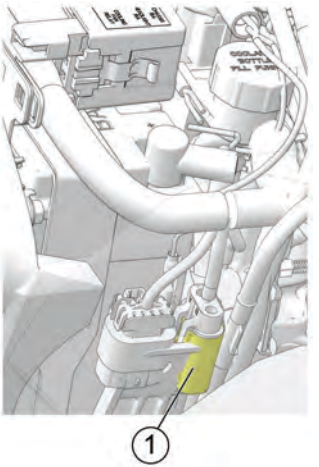

The standard fuse box is located under the seat. This fuse box houses all standard service fuses and the automatic circuit breakers. Fuse application and size are provided on a label on the fuse box cover.

1. Remove the seat. See the Seat Removal / Installation section for details.
2. Press the fuse box release tab ② inward and slide the fuse box rearward to remove it from the bracket. Use care to avoid pulling or stretching the wires.

3. Bend the cover clips ③ slightly away from the cover to remove the cover.

TIP
Use the fuse puller provided in the tool kit to remove a fuse.

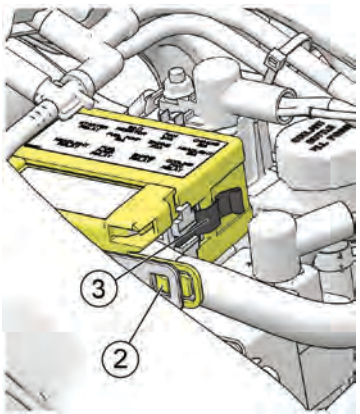

4. After replacing a fuse, reinstall the fuse box cover.
5. Reinstall the fuse box to the bracket. Make sure the release tab engages.
6. Reinstall the seat.

There is a satellite fuse box① that contains the front/rear coil and rear lighting fuses located under the seat, attached to bracket on the cooling bottle. Remove the fuse cap to inspect or replace fuses.

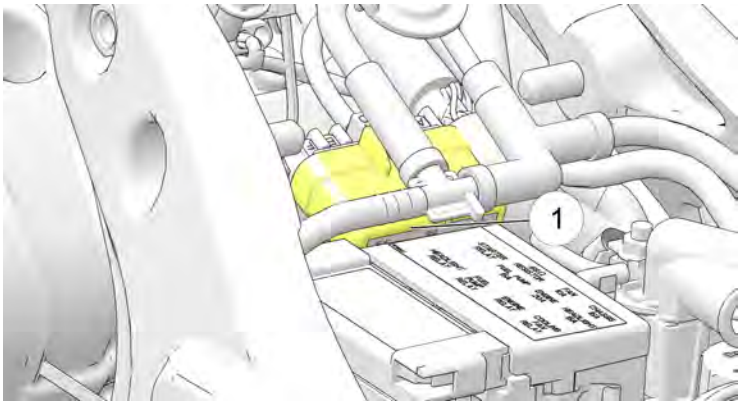

EXHAUST SYSTEM INSPECTION

Check the exhaust system for stains from leaking exhaust gasses. Replace damaged or leaking exhaust gaskets. Check all exhaust system fasteners. Tighten loose clamps and fasteners. Do not overtighten. See the *INDIAN MOTORCYCLE Service Manual* or an authorized INDIAN MOTORCYCLE dealer or other qualified dealer.

ELEVATING THE MOTORCYCLE

⚠ WARNING

Serious injury or death can occur if the motorcycle tips or falls. Make sure the motorcycle will not tip or fall while elevated or while on the sidestand.

Some procedures require raising the motorcycle to remove weight from the component being inspected. Elevate the motorcycle by placing a stable, flat platform jack or lift mechanism on a firm, flat surface and lifting under the engine crankcase. The platform should be a minimum of 12 in (30 cm) square. DO NOT attempt to lift the motorcycle without proper equipment. Always secure the motorcycle properly before lifting so it cannot tip or fall when elevated.

ROAD TEST

Before returning the motorcycle to regular use, perform a road test in a safe area. Pay special attention to the proper fit and operation of all serviced components.

Make any corrections or additional adjustments promptly to ensure safe, reliable and enjoyable vehicle performance.

FASTENER INSPECTION

1. Inspect the entire motorcycle chassis and engine for loose, damaged or missing fasteners. Tighten loose fasteners to the proper torque. See the *INDIAN MOTORCYCLE Service Manual* or an authorized INDIAN MOTORCYCLE dealer or other qualified dealer.
2. Always replace stripped, damaged or broken fasteners before riding. Use genuine INDIAN MOTORCYCLE fasteners of equal size and strength.

FASTENER TORQUES

Some procedures and fastener torques are not listed in this manual. See the *INDIAN MOTORCYCLE Service Manual* or an authorized INDIAN MOTORCYCLE dealer or other qualified dealer.

TROUBLESHOOTING

For your personal safety, do not attempt inspection or repairs not fully described in this rider's manual. Contact an authorized dealer for service if you cannot determine the cause of a problem or if the inspection/repair exceeds your mechanical ability or tool resources. Do not perform any inspection or repair with the engine running.

ENGINE CRANKS BUT WILL NOT START

POSSIBLE CAUSE	POSSIBLE REMEDY/ACTION
Low fuel	Verify fuel level
Fuel pump doesn't operate	Turn engine STOP switch to RUN. Turn the ignition key on. The fuel pump should run momentarily and then stop. Check the fuel pump/ignition circuit breaker. See page 116.
Battery voltage is too low	Fully charge the battery. See the Battery Charging section for details.
Fouled spark plug(s)	Please see your dealer.
Low compression	Please see your dealer for an engine compression test.
Both front and rear IGN COIL fuses have become damaged or opened	Check satellite fuse box to verify IGN COIL fuses are intact. See page 116.

STARTER MOTOR CLICKS, DOES NOT TURN OR TURNS SLOWLY

POSSIBLE CAUSE	POSSIBLE REMEDY/ACTION
Engine stop/run switch is in stop position	Place switch in RUN position.
Discharged battery	Fully charge the battery. See the Battery Charging section for details.
Loose or corroded battery cables	Inspect battery cables.
Transmission is in gear	Shift transmission into neutral or pull the clutch lever in to disengage the clutch.

ENGINE STARTS BUT MISSES OR RUNS POORLY

TIP
Turn engine OFF before inspecting any of these items.

POSSIBLE CAUSE	POSSIBLE REMEDY/ACTION
Discharged battery	Fully charge the battery. See the Battery Charging section for details.
Loose or corroded battery cables	Inspect battery cables and connections.
Fouled spark plug(s)	Please see your dealer.
Contaminated fuel	Inspect fuel for water/contamination. Please see your dealer.
Engine oil level incorrect or wrong oil type	Inspect level and quality of oil. See page 52.
Loose, broken, shorted ignition coil wires	Inspect coil primary wires. Please see your dealer.
Air intake restricted	Inspect air filter. See the Air Filter section for details.
Intake leaks	Inspect air box, crankcase breather hoses, throttle body and intake boot joints.
IGN COIL fuse has become damaged or opened	Check satellite fuse box to verify both IGN COIL fuses are intact. See page 116.

SHIFTING DIFFICULTIES OR HARD TO FIND NEUTRAL

POSSIBLE CAUSE	POSSIBLE REMEDY/ACTION
Clutch damage	Replace clutch.
Clutch cable not adjusted properly	Please see your dealer for inspection and adjustment.
Shift linkage not adjusted properly	Please see your dealer for inspection and adjustment.
Incorrect oil or oil in poor condition	Replace the oil with the recommended oil.

ENGINE OVERHEATING

POSSIBLE CAUSE	POSSIBLE REMEDY/ACTION
Debris lodged in radiator screen	Inspect and clean the screen.
Plugged radiator	Use a garden hose to flush any debris from the radiator fins. DO NOT use a high pressure washer, which can damage the radiator fins.
Blocked fan	Inspect fan, remove any blockage.
Fan doesn't operate	Please see your dealer.
Low coolant	Allow the engine to cool before checking coolant level. See page 78.
Air in cooling system	Please see your dealer.

BATTERY CHARGING RATE LOW OR BATTERY DISCHARGES

POSSIBLE CAUSE	POSSIBLE REMEDY/ACTION
Loose/Corroded Charging Circuit Connection	Check/clean battery cable connections. Check/clean charging circuit connections. Please see your dealer.
Accessory Load Exceeds Charge Rate	Limit accessory operation when the engine is off.
Improperly Wired Accessory (Current Draw)	Please see your dealer to check charging system output and current draw.

BRAKE NOISE/POOR BRAKE PERFORMANCE

NOTICE
See your dealer if brake performance does not return after these inspections.

POSSIBLE CAUSE	POSSIBLE REMEDY/ACTION
Dust/Dirt On Brake Disc(s)	Clean disc. See the Brake Disc Inspection / Cleaning section.
Worn Pads Or Disc/Brake Disc Damage	Inspect pads. See the Brake Disc Inspection / Cleaning section.
Brake Fluid Level Low Or Fluid Contaminated	Inspect fluid level/fluid condition. See the Front Brake Fluid Level and Rear Brake Fluid Level sections.

ANTI-LOCK BRAKE LIGHT REMAINS ILLUMINATED OR ILLUMINATES INTERMITTENTLY

POSSIBLE CAUSE	POSSIBLE REMEDY/ACTION
Blown fuse	Check the fuses.
Loose or damaged pulse ring	Inspect pulse ring for looseness or chipped teeth.
Debris lodged in components	Inspect wheel speed sensor and pulse ring for debris.
Damage caused by debris	Inspect wheel speed sensor for cracked housing.
Damaged components	See service manual or authorized dealer.

CLEANING AND STORAGE

CLEANING PRODUCTS

This section provides tips on the very best way to clean, polish and preserve every surface of your beautiful new INDIAN MOTORCYCLE. We recommend the use of our new INDIAN MOTORCYCLE cleaning and polishing products and accessories, which have been specially designed to offer the best care possible for your INDIAN MOTORCYCLE.

In addition to the products recommended in this section for cleaning and polishing, INDIAN MOTORCYCLE also has specialty products for:

- enhancing black and silver engines
- cleaning engines, tires and wheels
- removing brake dust

After cleaning the motorcycle, inspect for damage to the painted surfaces. Chips or scratches should be repaired promptly to prevent corrosion.

For Matte Clear Coat Finish Care, see the *Matte Clear Coat Finish Care* section for details.

For Gloss Clear Coat Finish Care, see the *Gloss Clear Coat Finish Care* section for details.

For more information, or for answers to your cleaning and detailing questions, please see your INDIAN MOTORCYCLE dealer or visit *https://www.indianmotorcycle.com/en-us/self-help/article/KA-01210/*.

WASHING THE MOTORCYCLE

NOTICE

Do not use pressurized water to wash the motorcycle. Water may seep in and deteriorate wheel bearings, brake caliper assemblies, brake master cylinders, electrical connectors, steering head bearings, and transmission seals.
Do not direct any water stream at air intakes, exhaust outlets, electrical connectors or audio system speakers.
Electrical components may be damaged by water. Do not allow water to contact electrical components or connectors

1. Before washing, make sure exhaust pipes are cool. Cover each pipe opening with a plastic bag secured with a strong rubber band. Check that the spark plugs, spark plug wire caps, oil fill cap and fuel caps are properly seated.
2. Do not use abrasive cleaners.
3. Rinse off as much dirt and mud as possible with water running at low pressure. Use as little water as possible when washing near the air intake or the exhaust pipe openings. Dry these components thoroughly before using the motorcycle.
4. Clean the front fork tubes thoroughly to reduce fork seal wear and leakage.

5. After washing, remove the rubber bands and plastic bags from the exhaust pipes. Start the engine and let it idle for a few minutes.
6. Make sure the brakes are functioning properly before riding.

WINDSHIELD CARE (IF EQUIPPED)

Clean the windshield with a soft cloth and plenty of warm water. Dry with a soft clean cloth. Remove minor scratches with a high-quality polishing compound designed for use on polycarbonate surfaces.

IMPORTANT
Brake fluid and alcohol will permanently damage the windshield and some types of thread-locking agents. Do not use glass cleaners, water or soil repellents, and petroleum or alcohol based cleaners on the windshield, as these products can damage the windshield.

GLOSS CLEAR COAT FINISH CARE

The Axalta® Sports and Equipment Finish System was used to provide the original gloss finish on your motorcycle. This finish system provides superior protection against the elements. To maximize the benefits of this system, use the following guide to care for the gloss finish on your motorcycle.

- During the first 30 days, when the finish is still fresh, clean the motorcycle with a water rinse only.
- Do not wax the motorcycle for the first 60 days. Doing so can cause loss of the gloss. After 60 days, use only waxes designed for new clear coat finishes.
- Do not use pressurized water to wash the motorcycle. When paint is still fresh, pressurized water could damage the finish. If using a pressure washer is unavoidable, keep the spray nozzle at least 24 in (60 cm) away from the surface of the motorcycle.
- Wash your motorcycle often, especially when exposed to salty, dusty, acidic or alkaline environments.
- Use warm or cool water and a soft cloth for cleaning.
- Use soaps that are non-abrasive and have a neutral pH (non acidic/non alkaline detergents).
- Do not use solvent-based solutions.
- Do not use a dry cloth to remove dust.
- Do not use a stiff bristle brush, which can scratch the surface.
- Do not wash with extremely hot water.
- Do not wash the motorcycle while the surface is hot and avoid washing the motorcycle in the hot sun. Minerals in the water may be difficult to remove once dried on the surface of the motorcycle.
- Do not allow spilled gasoline, motor oil or brake fluid to stand on the paint. Remove these substances immediately by rinsing with water. Use a soft cloth to absorb any remaining residue and dab dry.

- To remove bug remnants or road tar, use only products that are specifically designed for this purpose. Follow the product manufacturer's recommendations to prevent potential damage to the finish. Follow with a wash using the methods described in this section.
- Always brush away any ice or snow, do not scrape off.
- Chips or scratches should be repaired promptly to prevent corrosion.

MATTE CLEAR COAT FINISH CARE

Matte finish products are prone to trapping dirt, oils and other contaminants. Always clean this type of finish with warm water and a mild dish-washing detergent. Use a soft sponge to gently rub the surface, then rinse with clean warm water. For stubborn stains such as grease or oil, use a citrus-based cleaner. Spray the cleaner onto the area and rub gently with a soft sponge. Allow the cleaner to sit for a couple of minutes, then rinse well with clean warm water. Repeat as needed.

IMPORTANT

Never use a polishing/buffing wax or any sponge that has an abrasive surface when cleaning a matte finish. These products will buff the matte surface of the finish and result in a glossy finish. Never clean matte finishes with a pressure washer, as this will further imbed contaminants into the clear coat and may damage labels and decals.

STORAGE AREA PREPARATION

Choose a dry, well-ventilated storage location, inside a garage or other structure if possible. The location should have a firm, flat surface and allow enough space for the motorcycle.

⚠ WARNING

Gasoline is highly flammable and explosive under certain conditions. Do not store the motorcycle in any area (in home or garage) where it could be near open flames, pilot lights, sparks or electric motors. Do not smoke in the storage area.

To best preserve tire condition:

- The storage area should have a relatively constant and moderate temperature.
- The storage surface should be free of oil and gasoline.
- The motorcycle should not be near a radiator or other heat source, or any type of electric motor.

FUEL STABILIZER

Add fresh fuel to fill the fuel tank and add fuel stabilizer. Do not overfill.

Ride the motorcycle or start and run the engine for 15 minutes in a well ventilated area to distribute the stabilizer throughout the fuel system.

TIRE INFLATION

Inflate the tires to normal pressure. See the Tire Pressure section for details.

ENGINE PROTECTION

Change the engine oil. See the Engine Oil / Filter Change section for details.

COOLING SYSTEM

Check the coolant level and maintain as recommended by adding coolant to the recovery bottle. See the *Coolant Level Inspection* section for details.

BATTERY CARE

1. Remove the battery. See page 110.
2. Clean the battery terminals first with a wire brush to remove any loose deposits.
3. Wash the posts and the ends of the battery cables with a solution of one part baking soda to 16 parts water. Rinse with clean water and wipe dry.
4. Apply a thin film of dielectric grease to the posts and cable connectors.
5. Clean the outside of the battery with a solution of mild detergent and warm water.
6. Store the battery in a dry area with a temperature of 32° to 90° F (0° to 32° C).
7. While in storage, fully charge the battery once a month. See the Battery Charging section for details.

MAINTENANCE DURING STORAGE

During extended storage periods, maintain tire pressure and battery voltage at the recommended levels.

RODENTS

Mice and other rodents are often the worst enemy of a stored motorcycle. If the motorcycle will be stored in an area where mice are a concern (particularly in rural areas, barns, sheds, etc.) be sure to take extra measures to deter their infestation. This may include placing a screen mesh over any intake or exhaust openings (just be sure to remember to remove them when you take the motorcycle from storage).

PARK AND COVER THE MOTORCYCLE

1. Park the motorcycle in its storage location. Block the frame to take some of the weight off the front and rear wheels.

NOTICE

Starting the motorcycle periodically during storage is NOT recommended. Water vapor is a by-product of the combustion process, and corrosion may result unless the engine is operated long enough to bring the oil and exhaust system to normal operating temperature.

2. Secure a plastic bag over the (cooled) exhaust outlets to prevent moisture from entering the exhaust system.
3. Cover the motorcycle with a cover made from a durable, breathable material designed for storage. Covering the motorcycle helps protect it from dust and other airborne materials. The cover must be of a breathable material to prevent moisture from building up on the motorcycle which can cause oxidation of metal surfaces.

REMOVAL FROM STORAGE

1. Install a fully charged battery.
2. Check the oil level. If the motorcycle was stored in an area subject to wide swings in temperature and humidity (such as outdoors), change the engine oil before starting the engine.

NOTICE

During storage, temperature and humidity changes can cause condensation to form in the crankcase and mix with engine oil. Running the engine with oil that contains condensation can cause engine damage.

3. Inspect the storage area for signs of fluid leaks. Identify and perform service to any leaking components.
4. Remove any intake or exhaust mesh covers installed for rodent protection.
5. Make sure the fuel tank is at least 3/4 full.
6. Perform the pre-ride inspections. See page 49.
7. Perform a road test. See page 72.
8. Wash and polish the motorcycle. Wax, polish or apply protectant to appropriate components.

SPECIFICATIONS
INDIAN SCOUT BOBBER, BOBBER TWENTY, AND BOBBER SIXTY

2020	INDIAN SCOUT BOBBER	INDIAN SCOUT BOBBER TWENTY	INDIAN SCOUT BOBBER SIXTY
Dimensions (Dimensions and specifications may vary with features, options and accessories)			
Overall Length	US: 87.5 in. (2223 mm) International: 89.5 in. (2274 mm)		
Overall Width	36.5 in. (926 mm)	39.2 in. (995 mm)	36.5 in. (926 mm)
Overall Height	41.5 in. (1053 mm)	46.5 (1181 mm)	41.5 in. (1053 mm)
Seat Height	Unladen 26.1 in. (662 mm) Laden 25.6 in. (649 mm)	Unladen 27.9 in. (709 mm) Laden 27.4 in. (695 mm)	Unladen 26.1 in. (662 mm) Laden 25.6 in. (649 mm)
Wheelbase	62.0 in. (1576 mm)		
Ground Clearance	5.1 in. (129 mm)		
Rake (frame)/Trail	29° / 4.7 in. (119.9 mm)		

2020	INDIAN SCOUT BOBBER	INDIAN SCOUT BOBBER TWENTY	INDIAN SCOUT BOBBER SIXTY
Weight			
Dry Weight (without fuel/fluids)	US / International: 555 lbs. (252 kg) China: 556 lbs. (252 kg)	US / International: 564 lbs. (256 kg) China: 565 lbs. (256 kg)	US / International: 531 lbs. (241 kg) China: 532 lbs. (241 kg)
Wet Weight (with fuel/fluids)	US / International: 575 lbs. (261 kg) China: 576 lbs. (261 kg)	US / International: 584 lbs. (265 kg) China: 585 lbs. (265 kg)	US / International: 551 lbs. (250 kg) China: 552 lbs. (250 kg)
Gross Vehicle Weight Rating (GVWR)	988 lbs. (449 kg)		
Gross Axle Weight Rating (GAWR)	Front 371 lbs. (168 kg) Rear 675 lbs. (306 kg)		
Maximum Load Capacity (riders, cargo, accessories)	US / International: 413 lbs. (187 kg) China: 412 lbs. (187 kg)	US / International: 404 lbs. (183 kg) China: 403 lbs. (183 kg)	US / International: 437 lbs. (199 kg) China: 436 lbs. (199 kg)

2020	INDIAN SCOUT BOBBER	INDIAN SCOUT BOBBER TWENTY	INDIAN SCOUT BOBBER SIXTY
Capacities			
Engine Oil	3-4 qts. (2.8-3.8 L) with filter at oil change 4.5 qts. (4.25 L) total for new/rebuilt dry engine		
Fuel	3.3 gal. (12.5 L)		
Fuel Reserve (fuel light on)	.5 gal. (1.9 L)		
Fork Oil	18.6 oz. (550 cc)		
Radiator Coolant	2.75 qts. (2.6 L)		

2020	INDIAN SCOUT BOBBER	INDIAN SCOUT BOBBER TWENTY	INDIAN SCOUT BOBBER SIXTY
Engine			
Engine Type	Liquid Cooled V-Twin (60 degrees)		
Displacement	69 cu. in. (1133 cc)	69 cu. in. (1133 cc)	61 cu. in. (1000 cc)
Compression Ratio	10.7:1	10.7:1	11:1:1
Valve Train	DOHC, 4 Valves Per Cylinder, Graded Tappets		
Bore and Stroke	3.898" x 2.898" (99 mm x 74 mm)	3.898" x 2.898" (99 mm x 74 mm)	3.661"x 2.898" (93 mm x 74 mm)
Fuel System/Throttle Body Bore	Closed Loop Fuel Injection / 60 mm	Closed Loop Fuel Injection / 60 mm	Closed Loop Fuel Injection / 54 mm
Exhaust System	Split Dual Exhaust w/Crossover		
Rev Limit	8300 RPM		
Idle RPM	1150 +/- 50 RPM Fully Warm		
Lubrication System	Semi-Dry Sump		
Spark Plug/Gap	NGK MR7F/.030 inch (0.80 mm)		

2020	INDIAN SCOUT BOBBER	INDIAN SCOUT BOBBER TWENTY	INDIAN SCOUT BOBBER SIXTY
Chassis			
Front Suspension Type/Travel	Telescopic Fork/4.7 in. (120 mm)		
Front Fork Tube Diameter	41 mm		
Rear Suspension Type/Travel	Dual Shocks/2 in. (51 mm)		
Swingarm	Steel		
Front Brakes	Single/298 mm Rotor/2-Piston Caliper		
Rear Brakes	Single/298 mm Rotor/1-Piston Caliper		

2020	INDIAN SCOUT BOBBER	INDIAN SCOUT BOBBER TWENTY	INDIAN SCOUT BOBBER SIXTY
Drive System			
Primary Drive	Gear Drive Wet Clutch		
Crank Gear	46 Teeth		
Clutch Gear	77 Teeth		
Clutch Type	Wet, Multi-Plate		
Primary Reduction Ratio	1:674:1		
Transmission Type	6 Speed/Constant Mesh/Foot Shift		5 Speed/Constant Mesh/Foot Shift
1st Gear Ratio	2.769:1	2.769:1	2.769:1
2nd Gear Ratio	1.882:1	1.882:1	1.882:1
3rd Gear Ratio	1.500:1	1.500:1	1.500:1
4th Gear Ratio	1.273:1	1.273:1	1.273:1

2020	INDIAN SCOUT BOBBER	INDIAN SCOUT BOBBER TWENTY	INDIAN SCOUT BOBBER SIXTY
5th Gear Ratio	1.125:1	1.125:1	1.036:1
6th Gear Ratio	0.966:1	0.966:1	N/A
Gear Shift Pattern	1 Down/5 Up	1 Down/5 Up	1 Down/4 Up
Final Drive Type	Belt Drive, 141–Tooth		
Transmission	28–Tooth		
Rear Wheel	66–Tooth		
Ratio	2.357:1		

2020	INDIAN SCOUT BOBBER	INDIAN SCOUT BOBBER TWENTY	INDIAN SCOUT BOBBER SIXTY
Drive System Continued			
Overall Gear Ratio			
1st Gear	10.926:1		
2nd Gear	7.427:1		
3rd Gear	5.918:1		
4th Gear	5.022:1		
5th Gear	4.439:1		4.087:1
6th Gear	3.810:1		N/A

2020	INDIAN SCOUT BOBBER	INDIAN SCOUT BOBBER TWENTY	INDIAN SCOUT BOBBER SIXTY
Wheels And Tires			
Front Wheel Size/Type	16 in. x 3.5 in. Cast	16 in. x 3.5 in. Spoked	16 in. x 3.5 in. Cast

2020	INDIAN SCOUT BOBBER	INDIAN SCOUT BOBBER TWENTY	INDIAN SCOUT BOBBER SIXTY
Rear Wheel Size/Type	16 in. x 3.5 in. Cast	16 in. x 3.5 in. Spoked	16 in. x 3.5 in. Cast
Front Tire Type/Size	Pirelli MT60RS 130/90B16 67H		North America: Kenda K673F 130/90-16 72H Non-North America: Pirelli Night Dragon 130/90B16 67H
Rear Tire Type/Size	Pirelli MT60RS 150/80B16 77H		North America: Kenda K673 150/80-16 71H Non-North America: Pirelli Night Dragon 150/80B16 77H

2020	INDIAN SCOUT BOBBER	INDIAN SCOUT BOBBER TWENTY	INDIAN SCOUT BOBBER SIXTY
Electrical			
Alternator	460W @ 3000 RPM		
Battery	12 volt, 13 amp-hour, 245 CCA (cold cranking amps), Maintenance Free AGM		
Voltage Regulator	14.5 volts/32 amp		
Lamps (all bulbs are 12 volt)			
Headlight	Osram HB2 12V 60/55W LL		
Tail/Brake Light	Non-serviceable LED		
Front Turn Signal	Non-serviceable LED		
Rear Turn Signal	Non-Serviceable LED		
License Plate	Non-Serviceable LED		
Speedometer	Non-Serviceable LED		

2020	INDIAN SCOUT BOBBER	INDIAN SCOUT BOBBER TWENTY	INDIAN SCOUT BOBBER SIXTY
Indicator Lights	Non-Serviceable LED		
Position Bulb	W5W		

FUEL RECOMMENDATION

For best performance, use only unleaded gasoline with a 91 pump octane minimum (R+M/2 Method) or 95 RON minimum. DO NOT USE E-85 GASOLINE OR GASOLINE CONTAINING METHANOL. Using E85 or gasoline/methanol blends can result in poor starting and driveability, engine damage and damage to critical fuel system components.

- *Gasoline containing up to 10% Ethanol can be used.*

In the event that the recommended premium unleaded gasoline is not available and low octane fuel must be used, fill the fuel tank only partially with unleaded regular gasoline, then fill the tank fully with premium unleaded gasoline as soon as possible.

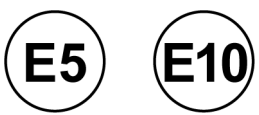

ENGINE OIL RECOMMENDATION

We recommend the use of INDIAN MOTORCYCLE Synthetic Blend 15W-60 Engine Oil for your motorcycle. This oil is formulated with synthetic-based oil and premium engine additives which have physical properties that meet API SM and ILSAC GF-4 specifications.

Do not blend oil additives with engine oil.

If oil must be added in an emergency and the recommended oil is not available, choose only a high-quality 15W-60 motorcycle oil. Change back to the recommended oil at the first opportunity.

Engine oil for this vehicle needs to be JASO MA compliant.

NOTICE
Use of non-recommended lubricants can result in engine damage. Damage resulting from the use of non-recommended lubricants is not covered by warranty.

FORK OIL

We recommend the use of INDIAN MOTORCYCLE Fork Oil for your motorcycle.

BRAKE FLUID

We recommend the use of INDIAN MOTORCYCLE DOT 4 Brake Fluid for both brake master cylinders. *DO NOT use DOT 5 silicone fluid.*

WARRANTY
INDIAN MOTORCYCLE WARRANTY POLICY
LIMITED WARRANTY

INDIAN MOTORCYCLE, 2100 Highway 55, Medina, Minnesota 55340 (INDIAN MOTORCYCLE) gives a LIMITED WARRANTY on all components of your INDIAN MOTORCYCLE against defects in material or workmanship. This warranty covers parts and labor charges for repair or replacement of defective parts and begins on the date of purchase by the original retail purchaser. This warranty is transferable to another owner during the warranty period through an authorized INDIAN MOTORCYCLE dealer, but any such transfer will not extend the original term of the warranty.

This warranty will be in effect for a period of:

TWENTY-FOUR (24) MONTHS for privately used motorcycles.

SIX (6) MONTHS for commercially used motorcycles or motorcycles that at any point during the warranty period were the subject of commercial rent.

The product is used commercially when it is used in connection with any work or employment that generates income, or is licensed for a commercial purpose during any part of the warranty period.

The duration of this warranty may vary in your jurisdiction based upon local laws and regulations.

REGISTRATION

At the time of sale, the Warranty Registration Form must be completed by your dealer and submitted to INDIAN MOTORCYCLE within ten days of purchase. Upon receipt of this registration, INDIAN MOTORCYCLE will record the registration for warranty. No verification of registration will be sent to the purchaser as the copy of the Warranty Registration Form will be your proof of warranty coverage. If you have not signed the original registration and received the customer copy, please contact your dealer immediately. NO WARRANTY COVERAGE WILL BE ALLOWED UNLESS YOUR MOTORCYCLE IS REGISTERED WITH INDIAN MOTORCYCLE. Initial dealer preparation and set-up of your motorcycle is very important in ensuring trouble-free operation. Purchasing a vehicle in the crate or without proper dealer set-up will void your warranty coverage.

WARRANTY COVERAGE AND EXCLUSIONS: LIMITATIONS OF WARRANTIES AND REMEDIES

This INDIAN MOTORCYCLE limited warranty excludes any failures that are not caused by a defect in material or workmanship. THIS WARRANTY DOES NOT COVER CLAIMS OF DEFECTIVE DESIGN. This warranty also does not cover acts of God, accidental damage, normal wear and tear, abuse or improper handling. This warranty also does not cover any motorcycle, component, or part that has been altered structurally, modified, neglected, improperly maintained, or used for purposes other than for which it was designed.

This warranty excludes damages or failures resulting from: improper lubrication; improper engine timing; improper fuel; surface imperfections caused by external stress, heat, cold or contamination; operator error or abuse; improper component alignment, tension, adjustment or altitude compensation; snow, water, dirt or other foreign substance ingestion/contamination; improper maintenance; modified components; use of aftermarket or unapproved components, accessories, or attachments; unauthorized repairs; or repairs made after the warranty period expires or by an unauthorized repair center.

This warranty excludes damages or failures caused by abuse, accident, fire, or any other cause other than a defect in materials or workmanship and provides no coverage for consumable components, general wear items, or any parts exposed to friction surfaces, stresses, environmental conditions and/or contamination for which they were not designed or not intended, including but not limited to the following items:

- Wheels and tires
- Suspension components
- Brake components
- Seat components
- Clutches and components
- Steering components
- Batteries
- Light bulbs/Sealed beam lamps
- Filters
- Lubricants
- Bushings
- Sealants
- Coolants
- Bearings
- Finished and unfinished surfaces
- Fuel Injectors/Throttle body components
- Engine components
- Drive belts
- Hydraulic components and fluids
- Circuit breakers/Fuses
- Electronic components
- Spark plugs

LUBRICANTS AND FLUIDS

1. Mixing oil brands or using non-recommended oil may cause engine damage. We recommend the use of INDIAN MOTORCYCLE engine oil.
2. Damage or failure resulting from the use of non-recommended lubricants or fluids is not covered by this warranty.

This warranty provides no coverage for personal loss or expense, including mileage, transportation costs, hotels, meals, shipping or handling fees, motorcycle pick-up or delivery, replacement rentals, loss of vehicle use, loss of profits, or loss of vacation or personal time.

The exclusive remedy for breach of this warranty shall be, at INDIAN MOTORCYCLE's option, repair or replacement of any defective materials, components, or products. THE REMEDIES SET FORTH IN THIS WARRANTY ARE THE ONLY REMEDIES AVAILABLE TO ANY PERSON FOR BREACH OF THIS WARRANTY. INDIAN MOTORCYCLE SHALL HAVE NO LIABILITY TO ANY PERSON FOR INCIDENTAL, CONSEQUENTIAL OR SPECIAL DAMAGES OF ANY DESCRIPTION, WHETHER ARISING OUT OF EXPRESS OR IMPLIED WARRANTY OR ANY OTHER CONTRACT, NEGLIGENCE, OR OTHER TORT OR OTHERWISE. THIS EXCLUSION OF CONSEQUENTAL, INCIDENTAL, AND SPECIAL DAMAGES IS INDEPENDENT FROM AND SHALL SURVIVE ANY FINDING THAT THE EXCLUSIVE REMEDY FAILED OF ITS ESSENTIAL PURPOSE.

THE IMPLIED WARRANTY OF FITNESS FOR A PARTICULAR PURPOSE IS EXCLUDED FROM THIS LIMITED WARRANTY. ALL OTHER IMPLIED WARRANTIES (INCLUDING BUT NOT LIMITED TO THE IMPLIED WARRANTY OF MERCHANTABILITY) ARE LIMITED IN DURATION TO THE ABOVE TWO YEAR WARRANTY PERIOD. INDIAN MOTORCYCLE DISCLAIMS ALL EXPRESS WARRANTIES NOT STATED IN THIS WARRANTY. SOME STATES DO NOT PERMIT THE EXCLUSION OR LIMITATION OF INCIDENTAL OR CONSEQUENTIAL DAMAGES OR ALLOW LIMITATIONS ON THE DURATION OF IMPLIED WARRANTIES, SO THE ABOVE LIMITATIONS MAY NOT APPLY TO YOU IF INCONSISTENT WITH CONTROLLING STATE LAW.

HOW TO OBTAIN WARRANTY SERVICE

If your motorcycle requires warranty service, you must take it to an INDIAN MOTORCYCLE Servicing Dealer. When requesting warranty service you must present your copy of the Warranty Registration Form to the dealer. (THE COST OF TRANSPORTATION TO AND FROM THE DEALER IS YOUR RESPONSIBILITY). INDIAN MOTORCYCLE suggests that you use your original selling dealer; however, you may use any INDIAN MOTORCYCLE Servicing Dealer to perform warranty service.

IN THE COUNTRY WHERE YOUR MOTORCYCLE WAS PURCHASED:

Warranty or Service Bulletin repairs must be done by an authorized INDIAN MOTORCYCLE dealer. If you move or are traveling within the country where your motorcycle was purchased, Warranty and Service Bulletin repairs may be requested from any authorized INDIAN MOTORCYCLE dealer.

OUTSIDE THE COUNTRY WHERE YOUR MOTORCYCLE WAS PURCHASED:

If you are traveling temporarily outside the country where your motorcycle was purchased, you should take your motorcycle to an authorized INDIAN MOTORCYCLE dealer. You must show the dealer photo identification from the country of the selling dealer's authorized location as proof of residence. Upon residence verification, the servicing dealer will be authorized to perform the warranty repair.

IF YOU MOVE:

If you move to another country, be sure to contact INDIAN MOTORCYCLE Customer Assistance and the customs department of the destination country before you move. Vehicle importation rules vary considerably from country to country. You may be required to present documentation of your move to INDIAN MOTORCYCLE in order to continue your warranty coverage. You may also be required to obtain documentation from INDIAN MOTORCYCLE in order to register your motorcycle in your new country. You should warranty register your motorcycle at a local INDIAN MOTORCYCLE dealer in your new country immediately after you move to continue your warranty coverage and to ensure that you receive information and notices regarding your motorcycle.

IF YOU PURCHASE FROM A PRIVATE PARTY:

If you purchase an INDIAN MOTORCYCLE from a private party, to be kept and used outside of the country in which the motorcycle was originally purchased, all warranty coverage will be denied. You must nonetheless register your motorcycle under your name and address with a local INDIAN MOTORCYCLE dealer in your country to ensure that you receive safety information and notices regarding your motorcycle.

EXPORTED VEHICLES

EXCEPT WHERE SPECIFICALLY REQUIRED BY LAW, THERE IS NO WARRANTY OR SERVICE BULLETIN COVERAGE ON THIS VEHICLE IF IT IS SOLD OUTSIDE THE COUNTRY OF THE SELLING DEALER'S AUTHORIZED LOCATION. This policy does not apply to vehicles that have received authorization for export from INDIAN MOTORCYCLE. Dealers may not give authorization for export. You should consult an authorized dealer to determine this vehicle's warranty or service coverage if you have any questions. This policy does not apply to vehicles registered to government officials or military personnel on assignment outside the country of the selling dealer's authorized location. This policy does not apply to Safety Bulletins.

NOTICE

If your vehicle is registered outside of the country where it was purchased and you have not followed the procedure set above, your vehicle will no longer be eligible for warranty or service bulletin coverage of any kind, other than safety bulletins. Vehicles registered to government officials or military personnel on assignment outside of the country where the vehicle was purchased will continue to be covered by the Limited Warranty.

Please work with your dealer to resolve any warranty issues. Should your dealer require any additional assistance, they will contact the appropriate person at INDIAN MOTORCYCLE.

MOTORCYCLE NOISE REGULATION

Tampering with noise control systems is prohibited. Federal law prohibits the following acts or causing thereof:

- The removal or rendering inoperative by any person other than for the purposes of maintenance, repair, or replacement, of any device or element of design incorporated into any new vehicle for the purpose of noise control prior to its sale or delivery to the ultimate purchaser or while it is in use, or
- The use of the vehicle after such device or element of design has been removed or rendered inoperative by any person.

Among those acts presumed to constitute tampering are:

- Removal or puncturing of the muffler, baffles, header pipes, or any other component which conducts exhaust gasses.
- Removal or puncturing of any part of the intake system.
- Lack of proper maintenance.
- Replacing any moving part of the vehicle, or parts of the exhaust system or intake system, with parts other than those specified by the manufacturer.

This product should be checked for repair or replacement if the motorcycle noise has increased significantly through use. Otherwise, the owner may become subject to penalties under state and local ordinances.

NOISE EMISSION WARRANTY

INDIAN MOTORCYCLE warrants that this exhaust system, at the time of sale, meets all applicable U.S. EPA Federal noise standards. This warranty extends to the first person who buys this exhaust system for purposes other than resale, and to all subsequent buyers.

Warranty claims should be directed to:

- *An authorized INDIAN MOTORCYCLE dealer, or*
- *INDIAN MOTORCYCLE, 2100 Highway 55, Medina, MN 55340*

EMISSIONS CONTROL SYSTEM WARRANTY

INDIAN MOTORCYCLE COMPANY – EMISSION CONTROL SYSTEM WARRANTY STATEMENT

YOUR WARRANTY RIGHTS AND OBLIGATIONS

The California Air Resources Board and INDIAN MOTORCYCLE are pleased to explain the emission control system warranty on your 2015 or later INDIAN MOTORCYCLE. In California, new motor vehicles must be designed, built and equipped to meet the state's stringent anti-smog standards. INDIAN MOTORCYCLE must warrant the emission control system on your motorcycle for the periods of time listed below provided there has been no abuse, neglect or improper maintenance of your motorcycle. Your emission control system may include parts such as the fuel-injection system, the ignition system, catalytic converter and engine computer. Also included may be hoses, belts, connectors and other emission related assemblies. Where a warrantable condition exists, INDIAN MOTORCYCLE will repair your motorcycle at no cost to you, including diagnosis, parts and labor.

MANUFACTURER'S WARRANTY COVERAGE

Class III motorcycles (280cc and larger): for a period of use of five (5) years or 30,000 kilometers (18,641 miles), whichever first occurs.

If an emission-related part on your motorcycle is defective, the part will be repaired or replaced by INDIAN MOTORCYCLE. This is your emission control system DEFECTS WARRANTY.

OWNER'S WARRANTY RESPONSIBILITIES

As the motorcycle owner, you are responsible for the performance of the required maintenance listed in your Rider's manual. INDIAN MOTORCYCLE recommends that you retain all receipts covering maintenance on your motorcycle, but INDIAN MOTORCYCLE cannot deny warranty solely for the lack of receipts or for your failure to ensure the performance of all scheduled maintenance. You are responsible for presenting your motorcycle to an INDIAN MOTORCYCLE dealer as soon as a problem exists. The warranty repairs should be completed in a reasonable amount of time, not to exceed 30 days. As the motorcycle owner, you should be aware that INDIAN MOTORCYCLE may deny your warranty coverage if your motorcycle or part has failed due to abuse, neglect, improper maintenance or unapproved modifications.

If you have any questions regarding your warranty rights and responsibilities, you should contact INDIAN MOTORCYCLE, 2100 Highway 55, Medina, MN 55340, or the California Air Resources Board, P.O. Box 8001, 9528 Telstar Avenue, El Monte, CA 91734-8001.

INDIAN MOTORCYCLE warrants that each new 2015 and later INDIAN MOTORCYCLE that includes as standard equipment a headlight, taillight and stoplight, and is street legal:

A. is designed, built and equipped so as to conform at the time of initial retail purchases with all applicable regulations of the United States Environmental Protection Agency, and the California Air Resources Board; and

B. is free from defects in material and workmanship which cause such motorcycle to fail to conform with applicable regulations of the United States Environmental Protection Agency or the California Air Resources Board for a period of use, depending on the engine displacement, of 12,000 kilometers (7,456miles), if the motorcycle's engine displacement is less than 170 cubic centimeters; of 18,000 kilometers (11,185 miles), if the motorcycle's engine displacement is equal or greater than 170 cubic centimeters but less than 280 cubic centimeters; or of 30,000 kilometers (18,641miles), if the motorcycle's engine displacement is 280 cubic centimeters or greater; or 5 (five) years from the date of initial retail delivery, whichever occurs first.

I. COVERAGE

Warranty defects shall be remedied during customary business hours at any authorized INDIAN MOTORCYCLE dealer located within the United States of America in compliance with the Clean Air Act and applicable regulations of the United States Environmental Protection Agency and the California Air Resources Board. Any part or parts replaced under this warranty shall become the property of INDIAN MOTORCYCLE.

In the State of California only, emission-related warranted parts are specifically defined by the state's Emission Warranty Parts List. These warranted parts are: carburetor and internal parts; intake manifold; fuel tank; fuel injection system; spark advance mechanism; crankcase breather; air cutoff valves; fuel tank cap for evaporative emission controlled vehicles; oil filler cap; pressure control valve; fuel/vapor separator; canister; igniters; breaker governors; ignition coils; ignition wires; ignition points; condensers, and spark plugs if failure occurs prior to the first scheduled replacement; and hoses, clamps, fittings and tubing used directly in these parts. Since emission related parts may vary from model to model, certain models may not contain all of these parts and certain models may contain functionally equivalent parts. In the State of California only, Emission Control System emergency repairs, as provided for in the California Administrative Code, may be performed by other than an authorized INDIAN MOTORCYCLE dealer. An emergency situation occurs when an authorized INDIAN MOTORCYCLE dealer is not reasonably available, a part is not available within 30 days or a repair is not complete within 30 days. Any replacement part can be used in an emergency repair. INDIAN MOTORCYCLE will reimburse the owner for expenses, including diagnosis, not to exceed INDIAN MOTORCYCLE's suggested retail price for all warranted parts replaced and labor charges based on INDIAN MOTORCYCLE'S recommended time allowance for the warranty repair and the geographically appropriate hourly labor rate. The owner may be required to keep receipts and failed parts in order to receive compensation.

II. LIMITATIONS

The Emission Control System Warranty shall not cover any of the following:

A. Repair or replacement required as a result of:

- Accident
- Misuse
- Repairs improperly performed or replacements improperly installed
- Use of replacement parts or accessories not conforming to INDIAN MOTORCYCLE specifications which adversely affect performance and/or
- Use in competitive racing or related events.

B. Inspections, replacement of parts, and other services and adjustments necessary for required maintenance.

C. Any motorcycle on which the odometer mileage has been changed so that actual mileage cannot be readily determined.

III. LIMITED LIABILITY

A. The liability of INDIAN MOTORCYCLE under this Emission Control System Warranty is limited solely to the remedying of defects in material or workmanship by an authorized INDIAN MOTORCYCLE dealer at its place of business during customary business hours. This warranty does not cover inconvenience or loss of use of the motorcycle or transportation of the motorcycle to or from the INDIAN MOTORCYCLE dealer. INDIAN MOTORCYCLE SHALL NOT BE LIABLE FOR ANY OTHER EXPENSES, LOSS OR DAMAGE, WHETHER DIRECT, INCIDENTAL, CONSEQUENTIAL OR EXEMPLARY ARISING IN CONNECTION WITH THE SALE OR USE OF OR INABILITY TO USE THE INDIAN MOTORCYCLE FOR ANY PURPOSE. SOME STATES DO NOT ALLOW THE EXCLUSION OR LIMITATION OF ANY INCIDENTAL OR CONSEQUENTIAL DAMAGES, SO THE ABOVE LIMITATIONS MAY NOT APPLY TO YOU.

B. NO EXPRESS EMISSION CONTROL SYSTEM WARRANTY IS GIVEN BY INDIAN MOTORCYCLE EXCEPT AS SPECIFICALLY SET FORTH HEREIN. ANY EMISSION CONTROL SYSTEM WARRANTY IMPLIED BY LAW, INCLUDING ANY WARRANTY OF MERCHANTABILITY OR FITNESS FOR A PARTICULAR PURPOSE, IS LIMITED TO THE EXPRESS EMISSION CONTROL SYSTEM WARRANTY TERMS STATED IN THIS WARRANTY. THE FOREGOING STATEMENTS OF WARRANTY ARE EXCLUSIVE AND IN LIEU OF ALL OTHER REMEDIES. SOME STATES DO NOT ALLOW LIMITATIONS ON HOW LONG AN IMPLIED WARRANTY LASTS SO THE ABOVE LIMITATIONS MAY NOT APPLY TO YOU.

C. No dealer is authorized to modify this INDIAN MOTORCYCLE Limited Emission Control System Warranty.

IV. LEGAL RIGHTS

THIS WARRANTY GIVES YOU SPECIFIC LEGAL RIGHTS, AND YOU MAY ALSO HAVE OTHER RIGHTS WHICH VARY FROM STATE TO STATE.

V. THIS WARRANTY IS IN ADDITION TO THE INDIAN MOTORCYCLE LIMITED MOTORCYCLE WARRANTY

VI. ADDITIONAL INFORMATION

Any replacement part that is equivalent in performance and durability may be used in the performance of any maintenance or repairs. However, INDIAN MOTORCYCLE is not liable for these parts. The owner is responsible for the performance of all required maintenance. Such maintenance may be performed at a service establishment or by any individual. The warranty period begins on the date the motorcycle is delivered to an ultimate purchaser.

INDIAN MOTORCYCLE

2100 Highway 55

Medina, MN 55340

ATTN: Warranty Department

CALIFORNIA CONSUMER NOTICE / NOTIFICACIÓN PARA LOS CLIENTES DE CALIFORNIA

Notification requirements in California. INDIAN MOTORCYCLE and your INDIAN MOTORCYCLE dealer place a high priority on your satisfaction with our performance. If you are not satisfied with our resolution of a warranty concern and you would like to seek a civil penalty from INDIAN MOTORCYCLE, you must follow these steps under California law (Cal. Code Civ. Proc., §871.24(a)-(d)):

At least 30 days before filing a lawsuit seeking civil penalties (Civ. Code § 1794(c)), you must:

1. Notify INDIAN MOTORCYCLE of your name and the name(s) of any other vehicle owner(s), the accurate Vehicle Identification Number (“VIN”) of your motorcycle, and a brief summary of the repair history and problems with your motorcycle, and
2. Demand that INDIAN MOTORCYCLE repurchase or replace your motorcycle.

When you submit the notice to INDIAN MOTORCYCLE, you must have possession of your motorcycle.

Your notice to INDIAN MOTORCYCLE must be in writing and must be sent either by email to calnotice@polaris.com or by certified or registered mail, return receipt requested, to:

Polaris Industries Inc.

ATTN: California Written Notice

2100 Highway 55

Medina, MN 55340

Requisitos para la notificación en California. INDIAN MOTORCYCLE y su distribuidor INDIAN MOTORCYCLE dan alta prioridad a su satisfacción con nuestro desempeño. Si no está satisfecho con nuestra resolución de cualquier problema de garantía y desea exigir sanciones civiles para INDIAN MOTORCYCLE, debe seguir estos pasos establecidos por la ley de California (Código de procedimiento civil de California §871.24(a)-(d)):

Al menos con 30 días de antelación a la presentación de una demanda exigiendo sanciones civiles (Código civil § 1794(c)), debe:

1. Notificar a INDIAN MOTORCYCLE su nombre y el nombre o los nombres de cualquier otro propietario o propietarios del vehículo, el número preciso de identificación del vehículo (“VIN”) de su motocicleta y un breve resumen del historial de reparaciones y problemas con su motocicleta, y
2. Exigir que INDIAN MOTORCYCLE recompre o reemplace su motocicleta.

Cuando presente la notificación a INDIAN MOTORCYCLE, debe tener posesión de su motocicleta.

Su notificación a INDIAN MOTORCYCLE debe ser por escrito y debe enviarse o por correo electrónico a calnotice@polaris.com o mediante correo certificado o registrado, con solicitud de acuse de recibo, a:

Polaris Industries Inc.

ATTN: California Written Notice

2100 Highway 55

Medina, MN 55340 EE. UU.

MAINTENANCE LOG

MAINTENANCE LOG

MAINTENANCE PERFORMED	MILES / KM	NOTES	PERFORMED BY

A

About the Rider's Manual....9
Accelerating 67
AGM Battery Charger Recommendations 113
AGM Battery Charging Recommendations – Deeply Discharged (Below 3 Volts)....114
AGM Battery Charging Recommendations – Low Charge 113
AGM Battery Charging Recommendations Table....115
AGM Battery Maintenance Tips 115
Air Filter 79
Anti-Lock Brake System (ABS) (if equipped) 47
Anti-Lock Brake System (ABS) Tone Ring/Sensor Inspection (if equipped) 101

B

Battery 110
Battery Care....126
Battery Charge Port/Heated Gear Plug 43
Battery Charging 112
Battery Charging and Maintenance 113
Battery Installation 111
Battery Removal....110
Battery Voltage 37
Brake Disc Inspection / Cleaning....100
Brake Fluid 135
Brake Fluid Precautions.... 95
Brake Hoses/Connections 95
Brake Pads.... 98
Braking 67
Break-In Maintenance 72

C

Carrying a Passenger 13
Cleaning Products....123
Clock 39
Clutch Lever.... 44
Console.... 28
Coolant Level Inspection 78
Cooling System 78
Crankcase Breather Hoses.... 91

D

Diagnostic Functionality 39
Display Units (Standard/Metric) 39

E

Electrical Inspections 50
Electrical Precautions 116
Elevating the Motorcycle....118
Engine Break-In 59
Engine Coolant Temperature 37
Engine Error Codes.... 41
Engine Identification Number 27
Engine Oil Level 52
Engine Oil Recommendation 135
Engine Oil/Filter Change 76
Engine Protection....126
Engine Speed.... 37
Engine Starter Switch.... 31
Engine Starts But Misses or Runs Poorly....120
Engine Stop/Run Switch 32
Evaporative Emission Control System (California Models).... 92
Exhaust System Inspection 117

F

Fastener Inspection 118
Fastener Torques 118
Fork Oil 135
Front Brake Fluid.... 97
Front Brake Fluid Level 54
Front Brake Lever.... 48, 96
Front Fork/Suspension Inspection.... 90
Front Suspension, Inspection 56
Front Wheel Installation 102
Fuel and Exhaust Safety 16
Fuel Filter 80

Fuel Level 57
Fuel Recommendation 135
Fuel Stabilizer 125
Fuel System Components 92
Fuel Tank Installation..... 83
Fuel Tank Removal 80
Fueling..... 61
Fuse Replacement.....116

G

Gear Indicator..... 39
Gear Shift Lever..... 44
Gloss Clear Coat Finish Care 124
Gross Vehicle Weight Rating..... 17
GVWR..... 17

H

Hazard Switch..... 32
Headlight Aim Adjustment.....108
Headlight Aim Inspection 107
Headlight Lamp Replacement 108
High/Low Headlight Beam Switch 33

I

Identification Number Record 7
Ignition/Light Key Switch..... 31
Indicator Lamps..... 35
Information Labels 19
Instrument Cluster 34

K

Key Identification Number 27

L

LUBRICANTS AND FLUIDS 139

M

Maintenance During Storage.....126
Maintenance Log 151
Maintenance, Major..... 72
Matte Clear Coat Finish Care 125
Mechanical Clutch Cable Lubrication.... 94
Mechanical Clutch Lever Freeplay..... 93
Mechanical Clutch Lever Lubrication 94
Mechanical Clutch, Inspection 56
MFD Indicators..... 38
Mirrors..... 45
Misfire Detection..... 63
Mode Button..... 32
Modifications 14
Multi-Function Display (MFD)..... 37

O

Odometer..... 37
Operating Speeds and Gears..... 60
Operation..... 59
Over Temperature Display and
Warning Indicator..... 42

P

Park and Cover the Motorcycle 127
Parking 68
Parking on a Slope 68
Parking on a Soft Surface..... 69
Parking the Motorcycle 14
Periodic Maintenance 73
Severe Use Definition..... 73
Periodic Maintenance Table 73
Pre-Ride Inspections..... 49
Brake Lines 55
Fasteners..... 57
Front Brake Lever, Inspection..... 55
Rear Brake Pedal, Inspection..... 55
Throttle 56
Tire Condition 54
Tires 53, 102
Priming the Fuel System..... 62
Protective Apparel 12

R

Re-torque Exhaust Hose Clamps..... 72
Rear Brake Fluid 96
Rear Brake Fluid Level 55
Rear Brake Pedal..... 48, 95
Rear Drive Belt Cleaning 85
Rear Drive Belt Condition 87
Rear Drive Belt Wear Analysis 86
Rear Drive Belt, Inspection 57
Rear Shock Preload (Ride Height) Adjustment 88
Rear Shock Preload Inspection 87
Rear Suspension, Inspection 56
Removal From Storage 127
Road Test.....118
Road Tests 72
Rodents 126

S

Saddlebags..... 14
Safe Riding Practices 9
  Motorcycling Has Inherent Risks.....9
Safety During Service Procedures..... 71
Safety Labels..... 19
Safety Maintenance 17
Safety Symbols and Signal Words 4
Scout Bobber Components I 21
Scout Bobber Components II..... 22
Scout Bobber Sixty - LH Side 26
Scout Bobber Sixty - RH Side..... 25
Scout Bobber Twenty Components I..... 23
Scout Bobber Twenty Components II..... 24
Scout Bobber, Bobber Twenty, and Bobber Sixty Specifications 129
Seat Removal
  Scout Bobber Twenty 105
Seat Removal – Scout Bobber and Bobber Sixty 105
Service and Warranty Information.....7
Service Procedures 71
Shift Points
  Recommended 66
Shifting Gears..... 64
Shifting Gears While Stationary 64
Sidestand..... 44
Sidestand Lubrication 92
Sidestand, Inspection 57
Spark Plugs.....101
Specifications 135
Speedometer 35
Starting the Engine..... 62
Steering Head Inspection 90
Steering Lock 46
Stopping the Engine 68
Storage Area Preparation 125
Swing Arm/Rear Axle Inspection 89
Switches 29

T

Throttle Control Grip 43
Throttle Control Inspection 92
Tire Condition 103
Tire Inflation.....126
Tire Pressure 53, 103
Tire Pressures.....104
Tire Replacement.....102
Tire Tread Depth.....54, 103
Tires 53, 102
Trademarks 2
Transporting the Motorcycle..... 15
Trip Odometer 37
Troubleshooting 119

W

Warranty
  California Consumer Notice / Notificación para los clientes de California 148
  Coverage and Exclusions 138
  Exported Vehicles.....141
  How to Obtain 140
  Limitations of Warranties and Remedies 138
  Limited Warranty 137
  Motorcycle Noise Regulation 141
  Noise Emission 142
  Notice 141

Registration 137
Washing the Motorcycle.....123
Wheel Alignment.....101
Wheel Inspection.....101
Windshield Care (if equipped).....124



To locate your nearest dealer,
visit www.indianmotorcycle.com

Indian Motorcycle Company
2100 Highway 55
Medina, MN 55340
Phone: 1-877-204-3697
French: 1-800-268-6334

Part No. 9931167 Rev 02
Printed in USA