

Owner's Manual for Maintenance and Safety

Sportsman® 850
Sportsman® 850 SP
Sportsman® 850 High Lifter

Sportsman® Touring 850
Sportsman® Touring 850 SP

Sportsman® XP 1000
Sportsman® XP Touring 1000
Sportsman® XP 1000 High Lifter

Read this manual carefully. It contains important safety information.
This is an adult vehicle only.
Operation is prohibited for those under 16 years of age.

⚠ WARNING

The engine exhaust from this product contains chemicals known to the State of California to cause cancer, birth defects or other reproductive harm.

A card containing important ATV safety information should be attached to the owner's manual on the next page.
If you cannot locate this card, or if it has been removed, please call 1-800-342-3764 for assistance.

For videos and more information about a safe riding experience with your Polaris vehicle, scan this QR code with your smartphone.



2016 Owner's Manual

Sportsman® 850
Sportsman® 850 High Lifter
Sportsman® 850 SP

Sportsman® Touring 850
Sportsman® Touring 850 SP

Sportsman® XP 1000
Sportsman® XP 1000 High Lifter
Sportsman® XP Touring 1000

POLARIS®, SPORTSMAN® and SPORTSMAN XP® are trademarks of POLARIS Industries Inc.

Copyright 2015 POLARIS Industries Inc. All information contained within this publication is based on the latest product information at the time of publication. Due to constant improvements in the design and quality of production components, some minor discrepancies may result between the actual vehicle and the information presented in this publication. Depictions and/or procedures in this publication are intended for reference use only. No liability can be accepted for omissions or inaccuracies. Any reprinting or reuse of the depictions and/or procedures contained within, whether whole or in part, is expressly prohibited.

The original instructions for this vehicle are in English. Other languages are provided as translations of the original instructions.

Printed in U.S.A.

P/N 9926448

TABLE OF CONTENTS

Introduction 4
Safety 9
Features and Controls 30
Operation 56
Winch Guide 79
Emission Control Systems 91
Maintenance 92
Troubleshooting 139
POLARIS Products 143
Specifications 144
Warranty 152
Maintenance Log 160
Index 162

INTRODUCTION

Thank you for purchasing a POLARIS vehicle, and welcome to our world-wide family of POLARIS enthusiasts. Be sure to visit us online at www.polaris.com for the latest news, new product introductions, upcoming events, career opportunities and more.

Here at POLARIS we proudly produce an exciting line of utility and recreational products.

- Snowmobiles
- All-terrain vehicles (ATVs)
- Low emission vehicles (LEVs)
- *RANGER*® utility vehicles
- BRUTUS® work vehicles
- SLINGSHOT® three wheel motorcycles
- *RZR*® sport vehicles
- GEM® electric vehicles
- VICTORY® motorcycles
- INDIAN® motorcycles
- POLARIS POWER® generators
- POLARIS DEFENSE® combat vehicles

We believe POLARIS sets a standard of excellence for all utility and recreational vehicles manufactured in the world today. Many years of experience have gone into the engineering, design, and development of your POLARIS vehicle, making it the finest machine we've ever produced.

For safe and enjoyable operation of your vehicle, be sure to follow the instructions and recommendations in this owner's manual.

Your manual contains instructions for minor maintenance, but information about major repairs is outlined in the POLARIS Service Manual and can be performed by a factory certified Master Service Dealer® (MSD) Technician.

Your POLARIS dealer knows your vehicle best and is interested in your total satisfaction. Your POLARIS dealership can provide for all of your service needs during, and after, the warranty period.

The following signal words and symbols appear throughout this manual and on your vehicle. Your safety is involved when these words and symbols are used. Become familiar with their meanings before reading the manual.



The safety alert symbol indicates a potential personal injury hazard.

DANGER

A DANGER indicates a hazardous situation that, if not avoided, will result in death or serious injury.

WARNING

A WARNING indicates a hazardous situation that, if not avoided, could result in death or serious injury.

CAUTION

A CAUTION indicates a hazardous situation that, if not avoided, could result in minor or moderate injury.

NOTICE

A NOTICE indicates a situation that could result in property damage.



The Prohibition Safety Sign indicates an action NOT to take in order to avoid a hazard.



The Mandatory Action Sign indicates an action that NEEDS to be taken to avoid a hazard.

INTRODUCTION

⚠ WARNING

Failure to heed the warnings and safety precautions contained in this manual can result in severe injury or death. A POLARIS ATV is not a toy and can be hazardous to operate. This vehicle handles differently than other vehicles, such as motorcycles and cars. A collision or rollover can occur quickly, even during routine maneuvers like turning, or driving on hills or over obstacles, if you fail to take proper precautions.

- Read this owner's manual. Understand all safety warnings, precautions and operating procedures before operating a POLARIS ATV. Keep this manual with the ATV.
- Never operate an ATV without proper instruction. Take a training course.
- This vehicle is an ADULT VEHICLE ONLY. Operation is prohibited for anyone under 16 years of age.
- Never permit a guest to operate the ATV unless the guest has read this manual and all product labels and has completed a certified safety training course.

European Vibration and Noise

The driver-perceived noise and hand/arm and whole body vibration levels of this machinery is measured per prEN 15997.

The operating conditions of the machinery during testing:

The vehicles were in like-new condition. The environment was controlled as indicated by the test procedure(s).

The uncertainty of vibration exposure measurement is dependent on many factors, including:

- Instrument and calibration uncertainty
- Variations in the machine such as wear of components
- Variation of machine operators such as experience or physique
- Ability of the worker to reproduce typical work during measurements
- Environmental factors such as ambient noise or temperature

INTRODUCTION
Vehicle Identification Numbers

Record your vehicle's identification numbers and key number in the spaces provided. Remove the spare key and store it in a safe place. An ignition key can be duplicated only by ordering a POLARIS key blank (using your key number) and mating it with one of your existing keys. The ignition switch must be replaced if all keys are lost.

The manufacturer’s label is located on the front right side of the vehicle behind the radiator.

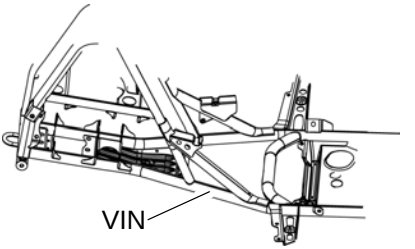

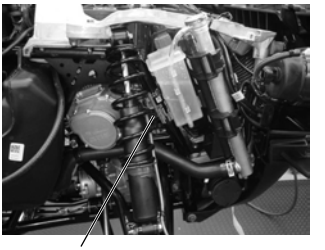

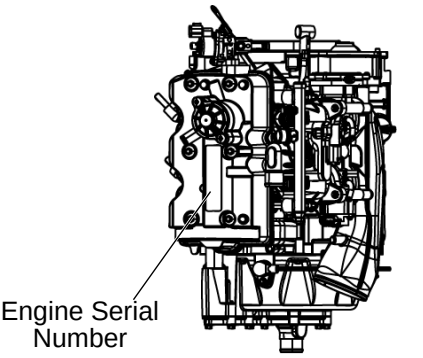

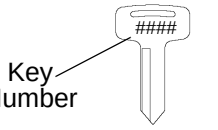

Vehicle Model Number: _____

Frame VIN: _____

Engine Serial Number: _____

Key Number: _____

Safety Training

ATV safety training is a top priority for POLARIS. POLARIS strongly encourages you and any family members who will be riding the ATV to take a training course.

If you purchased a new POLARIS ATV in the United States, your dealer provided information about the authorized ATV *RiderCourse*sm that is available to you and your eligible family members. This training is included in the purchase price of your ATV. You were also provided with printed materials that explain safe operating procedures. You should review this information on a regular basis.

If you purchased a used POLARIS ATV in the United States, you can enroll in the ATV *RiderCourse*sm for a fee. Call ATV Enrollment Express at (800) 887-2887 or visit www.atvsafety.org.

If you purchased a POLARIS ATV outside the United States, please contact your dealer or local law enforcement agencies for information about safety training.

A POLARIS ATV is an off-road vehicle. Familiarize yourself with all laws and regulations concerning the operation of this vehicle in your area.

We strongly advise you to strictly follow the recommended maintenance program outlined in your owner's manual. This preventive maintenance program is designed to ensure that all critical components on your vehicle are thoroughly inspected at specific intervals.

FOR MORE INFORMATION ABOUT ATV SAFETY in the United States, call the Consumer Product Safety Commission at 1-800-638-2772, or visit www.cpsc.gov, visit www.atvsafety.org, or call POLARIS at 1-800-342-3764.

SAFETY
Safe Riding Gear

Always wear appropriate clothing when riding an ATV. Wear protective clothing for comfort and to reduce the chance of injury.

Helmet

Wearing a helmet can prevent a severe head injury. Whenever riding a POLARIS vehicle, always wear a helmet that meets or exceeds established safety standards.

Approved helmets in the USA and Canada bear a U.S. Department of Transportation (DOT) label.

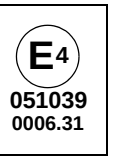

Approved helmets in Europe, Asia and Oceania bear the ECE 22.05 label. The ECE mark consists of a circle surrounding the letter E, followed by the distinguishing number of the country which has granted approval. The approval number and serial number will also be displayed on the label.



Safe Riding Gear

Eye Protection

Do not depend on eyeglasses or sunglasses for eye protection. Whenever riding a POLARIS vehicle, always wear shatterproof goggles or use a shatterproof helmet face shield. POLARIS recommends wearing approved Personal Protective Equipment (PPE) bearing markings such as VESC 8, V-8, Z87.1, or CE. Make sure protective eye wear is kept clean.

Gloves

Off-road style gloves with knuckle pads are the best for comfort and protection.

Boots

The best footwear is a pair of sturdy over-the-calf boots with low heels.

Clothing

Always wear long sleeves and long pants to protect arms and legs. Riding pants with kneepads and a jersey with shoulder pads provide the best protection.

Equipment Modifications

We strongly recommend that consumers do not install on a POLARIS ATV any equipment that may increase the speed or power of the vehicle, or make any other modifications to the vehicle for these purposes.

The POLARIS limited warranty on your POLARIS vehicle will be terminated if any non-POLARIS approved equipment and/or modifications have been added to the vehicle that increase speed or power.

The addition of certain accessories, including (but not limited to) mowers, blades, tires, sprayers, or large racks, may change the handling characteristics of the vehicle. Use only POLARIS-approved accessories, and familiarize yourself with their function and effect on the vehicle.

SAFETY
Safety Warnings

⚠ WARNING

Failure to operate the ATV properly can result in a collision, loss of control, accident or overturn, which may result in serious injury or death. Heed all safety warnings outlined in this section of the owner's manual. See the OPERATION section of the owner's manual for proper operating procedures.

Operating Without Instruction

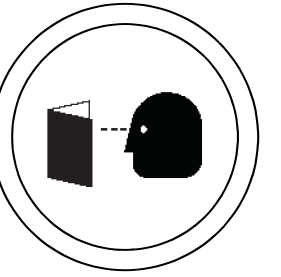

Operating this ATV without proper instruction increases the risk of an accident. The operator must understand how to operate the ATV properly in different situations and on different types of terrain.

Beginning and inexperienced operators should complete the recommended safety training before operating this vehicle. See page 9.

Never permit a guest to operate the ATV unless the guest has read this manual and all product labels and has completed a certified safety training course.

Age Restrictions



This vehicle is an ADULT VEHICLE ONLY. Operation is prohibited for anyone under 16 years of age.

Never allow anyone under 12 years of age to ride as a passenger on a 2-up ATV.

Even though a child may be within the recommended age group for operating some ATVs, he/she may not have the skills, abilities, or judgment needed to operate or ride on this ATV safely and could be susceptible to accident or injury.

Safety Warnings

Handling Gasoline

Gasoline is highly flammable and explosive under certain conditions.

- Always exercise extreme caution whenever handling gasoline.
- Always refuel with the engine stopped, and outdoors or in a well ventilated area.
- Do not smoke or allow open flames or sparks in or near the area where refueling is performed or where gasoline is stored.
- Do not overfill the tank. Do not fill the tank neck.
- If gasoline spills on your skin or clothing, immediately wash it off with soap and water and change clothing.

Exposure to Exhaust

Engine exhaust fumes are poisonous and can cause loss of consciousness or death in a short time. Never start the engine or let it run in an enclosed area.

The engine exhaust from this product contains chemicals known to cause cancer, birth defects or other reproductive harm. Operate this vehicle only outdoors or in well-ventilated areas.

Failure to Inspect Before Operating

Failure to inspect and verify that the ATV is in safe operating condition before operating increases the risk of an accident.

Always inspect the ATV before each use to make sure it's in safe operating condition.

Always follow all inspection and maintenance procedures and schedules described in the owner's manual.

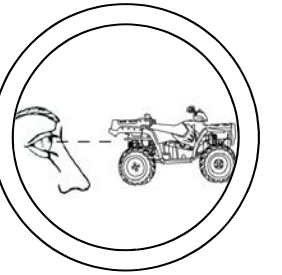

SAFETY
Safety Warnings
Protective Apparel

Riding in this vehicle without wearing an approved helmet and protective eyewear increases the risk of a serious injuries in the event of an accident.

Operator and passenger must always wear an approved helmet that fits properly and eye protection (goggles or face shield).



Carrying a Passenger

Carrying a passenger on a 1-up ATV greatly reduces the operator's ability to balance and control the ATV, which may result in an accident or overturn. Never carry a passenger on a 1-up ATV.

Do not carry a passenger on a 2-up ATV until you have at least two hours of driving experience with the vehicle.

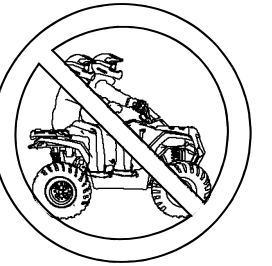

Carrying More Than One Passenger on a 2-Up ATV

Carrying more than one passenger on a 2-up ATV greatly reduces the operator's ability to balance and control the ATV, which may result in an accident or overturn. Never carry more than one passenger on a 2-up ATV.



Using Alcohol or Drugs

Operating the ATV after consuming alcohol or drugs could adversely affect operator judgment, reaction time, balance and perception.

Never consume alcohol or drugs before or while operating an ATV.



Safety Warnings

Operating on Pavement



Operating an ATV on paved surfaces (including sidewalks, paths, parking lots and driveways) may adversely affect the handling of the ATV and could result in loss of control and accident or overturn.

Avoid operating the ATV on pavement. ATV tires are designed for off-road use. If it's unavoidable, travel slowly and avoid sudden turns or stops.

Operating on Public Roads



Operating this vehicle on public streets, roads or highways could result in a collision with another vehicle. Never operate this vehicle on any public street, road or highway, including dirt and gravel roads (unless designated for off-highway use).

Operating at Excessive Speeds

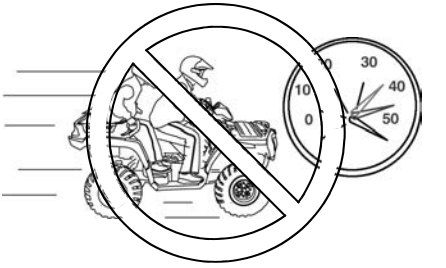

Operating the ATV at excessive speeds increases the operator's risk of losing control.

Never operate at excessive speeds. Travel at speeds appropriate for your skills, your passenger's skills, and operating conditions.

SAFETY
Safety Warnings
Physical Control of the ATV



Removing even one hand or foot can reduce ability to control the vehicle or could cause loss of balance and ejection from the ATV.

If a person's feet are not firmly planted on the footrests, they could come into contact with the wheels or other moving parts and lead to accident or injury.

Always keep both hands on the handlebars and both feet on the footrests of the ATV during operation. A passenger should always be seated in the passenger seat with both feet on the footrests and both hands on the passenger grab handles at all times. The passenger should never hold on to the operator.

Turning Improperly



Turning improperly could cause loss of traction, loss of control, accident or overturn.

Always follow proper procedures for turning as described in the owner's manual.

Practice turning at slow speeds before attempting to turn at faster speeds.

Never turn at excessive speed.

Jumps and Stunts



Attempting wheelies, jumps and other stunts increases the risk of an accident or overturn.

Never attempt wheelies, jumps, or other stunts. Avoid exhibition driving.

Safety Warnings

Improper Hill Climbing

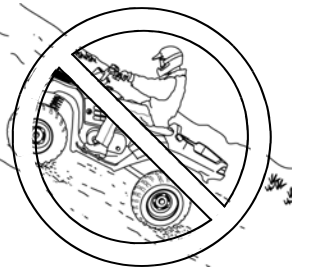

Improper hill climbing could cause loss of control or overturn. Always follow proper procedures for climbing hills as described in the owner's manual. See page 67. Always move the 4X4 switch to ADC 4X4 before ascending or descending a hill.

Descending Hills Improperly

Improperly descending a hill could cause loss of control or overturn.

- Always follow proper procedures for traveling down hills as described in the owner's manual. See page 69.
- Always descend a hill with the transmission in forward gear. Do not descend a hill with the transmission in neutral. Always move the 4X4 switch to ADC 4X4 before ascending or descending a hill. See page 43.
- Always check the terrain carefully before descending a hill.
- Shift your weight rearward.
- Never travel down a hill at high speed.
- Avoid traveling down a hill at an angle, which would cause the vehicle to lean sharply to one side. Travel straight down the hill when possible.

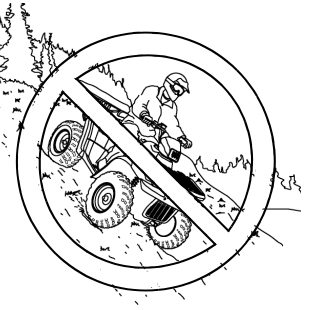

Crossing Hillsides



Driving on a sidehill is not recommended. Improper procedure could cause loss of control or overturn. Avoid crossing the side of any hill unless absolutely necessary.

If crossing a hillside is unavoidable, always follow proper procedures as described in the owner's manual. See page 68.

Never attempt to turn the ATV around on any hill until you've mastered the turning technique (on level ground) as described in the owner's manual. See page 70.

SAFETY
Safety Warnings
Stalling While Climbing a Hill



Stalling, rolling backwards or improperly dismounting while climbing a hill could cause an overturn.

- Always maintain a steady speed when climbing a hill.
- Always move the 4X4 switch to ADC 4X4 before ascending or descending a hill. See page 43.

If all forward speed is lost:

- Lean forward to keep body weight uphill. A passenger should also lean uphill.
- Apply the single lever brakes.
- Lock the parking brake when fully stopped.
- Dismount on the uphill side of the vehicle, or on the left if the vehicle is pointing straight uphill. Have a passenger dismount first, then the operator may dismount.
- Turn the ATV around and remount, following the procedure described in the owner's manual. See page 70.

If the ATV begins rolling backwards:

- Keep operator and passenger body weight uphill.
- Never apply engine power.
- Never apply the rear brake while rolling backwards.
- Apply the single-lever brake gradually.
- When fully stopped, apply the foot brake as well, and then lock the parking brake.
- Dismount on the uphill side of the vehicle, or on the left if the vehicle is pointing straight uphill. Have a passenger dismount first, then the operator may dismount.
- Turn the ATV around and remount, following the procedure described in the owner's manual. See page 70.

Operating on Steep Hills

Operating on excessively steep hills could cause an overturn.

Never operate on hills too steep for the ATV or for your abilities.

- Never operate a 1-up ATV on hills steeper than 25 degrees.
- Never operate a 2-up ATV on hills steeper than 15 degrees.

Safety Warnings

Operating on Slippery Terrain



Failure to use extra caution when operating on excessively rough, slippery or loose terrain could cause loss of traction, loss of control, accident or overturn.

Do not operate on excessively rough, slippery or loose terrain until you've learned and practiced the skills necessary to control the ATV on such terrain.

Always use extra caution on rough, slippery or loose terrain.

Operating in Unfamiliar Terrain



Failure to use extra caution when operating on unfamiliar terrain could result in an accident or overturn.

Unfamiliar terrain may contain hidden rocks, bumps, or holes that could cause loss of control or overturn.

Travel slowly and use extra caution when operating on unfamiliar terrain. Always be alert to changing terrain conditions.

Operating Improperly in Reverse



Improperly operating in reverse could result in a collision with an obstacle or person. Always follow proper operating procedures as outlined in this manual. See page 74.

Before shifting into reverse gear, always check for obstacles or people behind the ATV. When it's safe to proceed, back slowly.

SAFETY
Safety Warnings
Improper Tire Maintenance

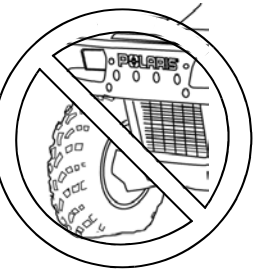

Operating this ATV with improper tires or with improper or uneven tire pressure could cause loss of control or accident.

Always use the size and type of tires specified for your ATV.

Always maintain proper tire pressure as described in the owner's manual and on safety labels.

Operating Over Obstacles



Improperly operating over obstacles could cause loss of control or overturn.

Before operating in a new area, check for obstacles. Avoid operating over large obstacles such as rocks and fallen trees. If unavoidable, use extreme caution and always follow proper operating procedures as outlined in this manual. See page 73.

Skidding or Sliding



Skidding or sliding can cause loss of control or overturn (if tires regain traction unexpectedly).

On slippery surfaces such as ice or loose gravel, travel slowly and use extra caution to reduce the chance of skidding or sliding. Do not operate on excessively slippery surfaces.

Operating a Damaged ATV

Operating a damaged ATV can result in an accident. After any overturn or accident, have a qualified service dealer inspect the entire machine for possible damage, including (but not limited to) brakes, throttle and steering systems.

Safety Warnings

Operating Through Deep Water



Operating the ATV through deep or fast-flowing water could cause the tires to float, causing loss of control or overturn.

Avoid operating the ATV through deep or fast-flowing water. If it's unavoidable to enter water that exceeds the recommended maximum depth (see page 72):

- Travel slowly.
- Balance your weight carefully.
- Avoid sudden movements.
- Maintain a slow and steady forward motion. Do not make sudden turns or stops, and do not make sudden throttle changes.

Wet brakes may have reduced stopping ability. After leaving water, test the brakes. Apply them lightly several times while driving. The friction will help dry out the pads.

Improper Cargo Loading



Overloading the ATV or carrying/towing cargo improperly may cause changes in handling, which could cause loss of control or an accident.

- Never exceed the stated load capacity for this ATV.
- Cargo should be properly distributed and securely attached.
- Reduce speed when carrying cargo or pulling a trailer. Allow a greater distance for braking.
- Always follow the instructions in the owner's manual for carrying cargo or pulling a trailer. See pages 76-78.
- Always follow the instructions in the owner's manual for operating with a passenger. See page 64.

SAFETY

Safety Warnings

Operating on Frozen Bodies of Water



Operating on frozen bodies of water may result in serious injury or death if the ATV and/or riders fall through the ice.

Never operate the ATV on a frozen body of water unless you have independently verified that the ice is sufficiently thick to support the weight and moving force of the ATV, you and your cargo, together with any other vehicles in your party. Variances in snow depth and/or water currents may result in uneven ice thickness. Always check with local authorities and residents to confirm ice conditions and thickness over your entire route. ATV operators assume all risk associated with ice conditions on frozen bodies of water.

Poor Visibility

Operating the ATV in darkness or inclement weather could result in a collision or accident, especially if operating on a road or street. This ATV is not equipped with highway-approved lights. Operate this vehicle off-road only. Use caution and drive at reduced speeds in conditions of reduced visibility such as fog, rain and darkness. Clean headlights frequently and replace burned out headlamps promptly.

Physical Skills

Safe operation of this rider-active vehicle requires good judgement and physical skills. Persons with cognitive or physical disabilities who operate this vehicle have an increased risk of overturn and loss of control. Never secure a passenger to the vehicle or to the operator with a belt, rope or similar device.

Hot Exhaust Systems

Exhaust system components are very hot during and after use of the vehicle. Hot components can cause burns and fire. Do not touch hot exhaust system components. Always keep combustible materials away from the exhaust system. Use caution when traveling through tall grass, especially dry grass.

Unauthorized Use of the ATV

Leaving the keys in the ignition can lead to unauthorized use of the vehicle, which could result in an accident or overturn. Always remove the ignition key when the vehicle is not in use.

Safety Labels and Locations

Warning labels have been placed on the vehicle for your protection. Read and follow the instructions on each label carefully. If any of the labels shown in this manual differ from the labels on your vehicle, always read and follow the instructions of the labels on the vehicle.

If an informational or graphic label becomes illegible or comes off, contact your POLARIS dealer to purchase a replacement. Replacement *safety* labels are provided by POLARIS at no charge. The part number is printed on the label.

“No Passenger” Warning (1-Up Models)

WARNING

NEVER ride as a passenger.

Passengers can cause a loss of control, resulting in SEVERE INJURY or DEATH.

7175378

“No Passenger” Warning (1-Up Models)



Tire Pressure/Load Warning

SAFETY
Safety Labels and Locations

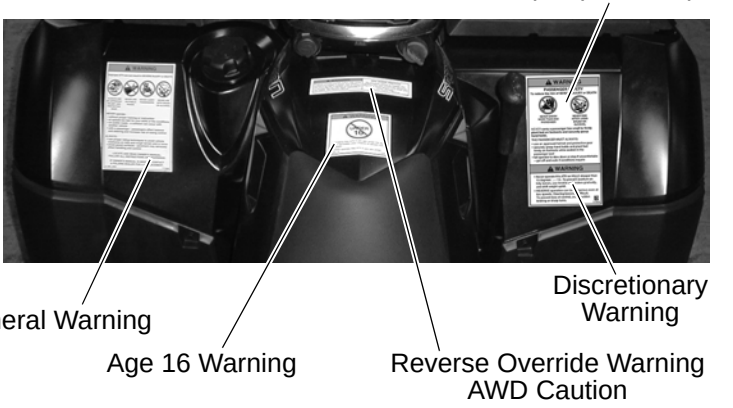

Reverse Override Warning/AWD Caution (All Models)

WARNING

Improper use of override button can lead to loss of control resulting in severe injury or death. Do not activate override while throttle is engaged. Always apply throttle gradually while in reverse.

CAUTION

Do not push switch to engage 4x4 (AWD) if the rear wheels are spinning. This may cause severe drive shaft and clutch damage.

Age 16 Warning (All Models)

WARNING

Operating this ATV if you are under the age of 16 increases the chances of severe injury or death to both operator and passenger.

NEVER operate this ATV if you are under age 16.

Safety Labels and Locations

Passenger Warning (2-Up Models)

WARNING

PASSENGER SAFETY

To reduce the risk of SEVERE INJURY or DEATH

NEVER CARRY MORE THAN ONE PASSENGER

NEVER RIDE AFTER USING DRUGS OR ALCOHOL

NEVER carry a passenger too small to firmly plant feet on footrests and securely grasp hand holds.

THE PASSENGER MUST **ALWAYS**:

- use an approved helmet and protective gear
- securely grasp hand holds and plant feet firmly on footrests while seated in the passenger seat
- tell operator to slow down or stop if uncomfortable - get off and walk if conditions require

Discretionary Warning (2-Up Models)

WARNING

- Never operate this ATV on HILLS steeper than 15 degrees ∠ 15°. To prevent overturn on hilly terrain, use throttle and brakes gradually, and shift weight uphill.
- REVERSE operation can be dangerous even at low speeds. Steering becomes difficult. To prevent loss of control, avoid sudden braking or sharp turns.

Discretionary Warning (1-Up Models)

WARNING

- Never operate this ATV on HILLS steeper than 25 degrees ∠ 25°. To prevent overturn on hilly terrain, use throttle and brakes gradually, and shift weight uphill.
- REVERSE operation can be dangerous even at low speeds. Steering becomes difficult. To prevent loss of control, avoid sudden braking or sharp turns.

SAFETY
Safety Labels and Locations



General Warning

General Warning (1-Up Models)

WARNING

Improper ATV use can result in SEVERE INJURY or DEATH

ALWAYS USE AN APPROVED HELMET AND PROTECTIVE GEAR

NEVER USE ON PUBLIC ROADS

NEVER CARRY PASSENGERS

NEVER USE WITH DRUGS OR ALCOHOL

NEVER operate:

- without proper training or instruction
- at speeds too fast for your skills or the conditions
- on public roads - a collision can occur with another vehicle
- with a passenger - passengers affect balance and steering and increase risk of losing control

ALWAYS:

- use proper riding techniques to avoid vehicle overturns on hills and rough terrain and in turns
- avoid paved surfaces - pavement may seriously affect handling and control

LOCATE AND READ OWNER'S MANUAL.

FOLLOW ALL INSTRUCTIONS AND WARNINGS.

Safety Labels and Locations

General Warning (2-Up Models)

WARNING

Improper ATV use can result in SEVERE INJURY or DEATH

ALWAYS USE AN APPROVED HELMET AND PROTECTIVE GEAR FOR DRIVER AND PASSENGER

NEVER USE ON PUBLIC ROADS

NEVER CARRY MORE THAN 1 PASSENGER

NEVER USE WITH DRUGS OR ALCOHOL

NEVER operate:

- without proper ATV training or instruction
- at speeds too fast for your skills or the conditions
- on public roads - a collision can occur with another vehicle
- with a passenger unless passenger seat is securely in place

THE OPERATOR MUST **ALWAYS**:

- use proper riding techniques to avoid overturns on hills and rough terrain and in turns
- avoid paved surfaces - pavement may seriously affect handling and control
- reduce speed and use extra caution at all times when carrying a passenger - dismount passenger when conditions require
- make sure passenger reads and understands this label and passenger safety label

LOCATE AND READ OPERATOR'S MANUAL.

FOLLOW ALL INSTRUCTIONS AND WARNINGS.

SAFETY

Safety Labels and Locations

Tire Pressure/Load Warning (High Lifter Models)

WARNING

Improper tire pressure or overloading can cause loss of control.

Loss of control can result in severe injury or death.

- Cold tire pressure:
  Front: 7.0 psi (48.3 kPa)
  Rear: 7.0 psi (48.3 kPa)
- Maximum weight capacity: 275 lbs. (125 kg)
- Lug nut torque values: 75 ft-lbs. (102 Nm)

Tire Pressure/Load Warning (1-Up Except High Lifter)

WARNING

Improper tire pressure or overloading can cause loss of control.

Loss of control can result in severe injury or death.

- Cold tire pressure:
  Front: 7.0 psi (48.3 kPa)
  Rear: 7.0 psi (48.3 kPa)
- Maximum weight capacity: 575 lbs. (261 kg)
- Lug nut torque values: 75 ft-lbs. (102 Nm)

NEVER exceed 50 MPH (80 km/h) when rear cargo loads are above 75 lbs. (34 kg) and/or front cargo loads are above 37 lbs. (17 kg).

NEVER exceed 10 MPH (16 km/h) when rear cargo loads are above 200 lbs. (91 kg) and/or front cargo loads are above 100 lbs. (45 kg).

Tire Pressure/Load Warning (2-Up Models)

WARNING

Improper tire pressure or overloading can cause loss of control.

Loss of control can result in severe injury or death.

- Cold tire pressure:
  Front: 7.0 psi (48.3 kPa)
  Rear: 7.0 psi (48.3 kPa)
- Maximum weight capacity: 575 lbs. (261 kg)
- Lug nut torque values: 75 ft-lbs. (102 Nm)

NEVER exceed 50 MPH (80 km/h) when rear cargo loads are above 75 lbs. (34 kg) and/or front cargo loads are above 37 lbs. (17 kg).

NEVER exceed 50 MPH (80 km/h) while carrying a passenger.

NEVER exceed 10 MPH (16 km/h) when rear cargo loads are above 200 lbs. (91 kg) and/or front cargo loads are above 100 lbs. (45 kg).

Safety Labels and Locations

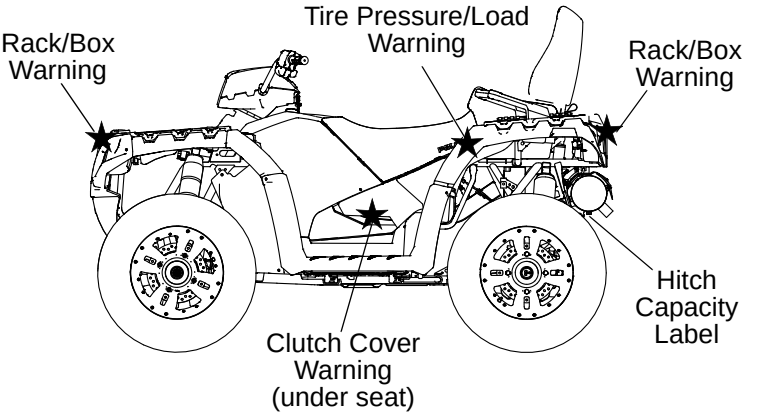

Rack/Box Warning (All Models Except High Lifter)

WARNING

- DO NOT TOW FROM RACK OR BUMPER. Vehicle damage or tipover may result causing severe injury or death. Tow only from tow hooks or hitch.
- Maximum Rack Loads: Front 120 lbs. (54 kg) Rear 240 lbs. (109 kg)

Rack Warning (High Lifter Models)

WARNING

- DO NOT TOW FROM RACK OR BUMPER. Vehicle damage or tipover may result causing severe injury or death. Tow only from tow hooks or hitch.
- Maximum Rack Loads: Front 0 lbs. (0 kg) Rear 75 lbs. (34 kg)

Clutch Cover Warning (All Models)

WARNING

- Moving parts hazard under belt-clutch guard. To prevent serious injury, do not operate vehicle with guard removed.
- Do not modify engine or clutch. Doing so can cause part failure, possible imbalance, and excessive engine RPM, which can result in serious injury or death.

Hitch Capacity Label (All Models)

TRAILER MAX WEIGHT:

1500 LBS. (682 KG) ON LEVEL GROUND

850 LBS. (386 KG) UP TO 15° GRADE

HITCH MAX. VERTICAL WEIGHT: 150 LBS. (68 KG)

FEATURES AND CONTROLS
Switches

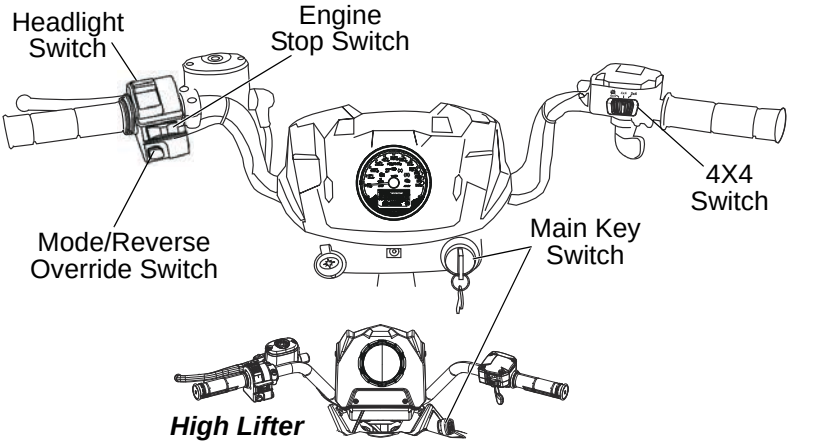

Mode/Reverse Override Switch

This vehicle is equipped with a reverse speed limiter system. To gain additional wheel speed while backing, release the throttle and depress the override button.

WARNING! Pressing the override button while the throttle is open can cause loss of control, which may result in serious injury or death. Always release the throttle before pressing the override button.

The reverse override button also acts as a MODE button when held down for approximately one half second. See the instrument cluster information beginning on page 44.

Tip: The override button will not function as a MODE button if the transmission is in reverse.

4X4 Switch

Use the 4X4 switch to engage ADC 4X4, 4X4 or 2X4. See page 43. The vehicle automatically engages 4X4 when operating in reverse if the switch is set to either 4X4 position.

Switches

Engine Stop Switch

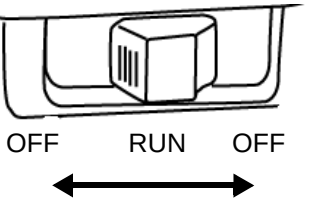

Move the stop switch either left or right to the OFF position to stop the engine quickly. Move the stop switch to the RUN position before attempting to start the engine. The engine will not start or run when the switch is off.

Both the main switch and the engine stop switch will shut off all electrical power to the vehicle, including lights.

Main Key Switch

Use the main key switch to start the engine. See page 61.

Headlight Switch

Use the headlight switch to turn the lights on and off and to change the lights from high beam (if equipped) to low beam. The key must be in the ON position and the engine stop switch must be in the RUN position.

FEATURES AND CONTROLS
Throttle Lever

⚠ WARNING

Operating an ATV with sticking or improperly operating throttle controls could cause an accident. Never start or operate an ATV that has a sticking or improperly operating throttle. Immediately contact your POLARIS dealer or other qualified person for service if throttle problems arise.

Failure to check or maintain proper operation of the throttle system can result in an accident if the throttle lever sticks during operation. Always check the lever for free movement and return before starting the engine. Also check occasionally during operation.

Modifications to the electronic throttle control could result in failure to perform as designed, which could result in an accident. Do not attempt to modify the throttle control system or replace it with any after market throttle mechanisms. Always ensure that the throttle cable is installed and properly routed to the throttle control.

Engine speed and vehicle movement are controlled by pressing the throttle lever. The throttle lever is spring loaded. Engine speed returns to idle when the lever is released.

This ATV is equipped with a throttle release switch, which is designed to reduce the risk of a frozen or stuck throttle.

If the throttle cable should stick in an open position when the operator releases the throttle lever, engine speed will be limited to idle speed.

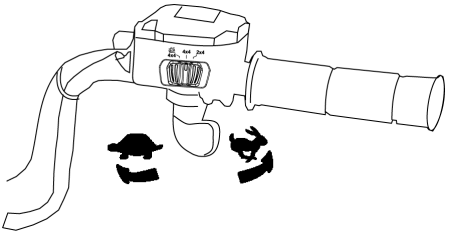

Brake Lever

⚠ WARNING

Operating the ATV with a spongy brake lever can result in loss of braking, which could cause an accident. Never operate the ATV with a spongy-feeling brake lever. Always contact your dealer for service before operating the vehicle.

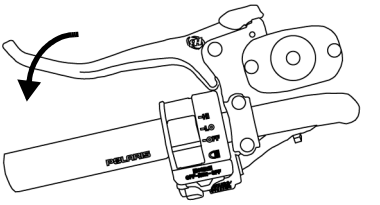

Squeeze the brake lever toward the handlebar to apply the front and rear brakes. These brakes are hydraulically activated disc type brakes that are activated by only one lever.

Always test brake lever travel and master cylinder fluid level before riding. When squeezed, the lever should feel firm. Any sponginess would indicate a possible fluid leak or low master cylinder fluid level, which must be corrected before riding. Contact your POLARIS dealer or other qualified service facility for proper diagnosis and repairs.

FEATURES AND CONTROLS
Master Cylinder/Brake Fluid

⚠ WARNING

An over-full master cylinder may cause brake drag or brake lock-up, which could result in an accident. Maintain brake fluid at the recommended level. Do not overfill.

Never store or use a partial bottle of brake fluid. Brake fluid is hygroscopic, meaning it rapidly absorbs moisture from the air. The moisture causes the boiling temperature of the brake fluid to drop, which can lead to early brake fade and the possibility of brake failure, which could result in an accident. After opening a bottle of brake fluid, always discard any unused portion.

Check the brake fluid in the master cylinder before each ride.

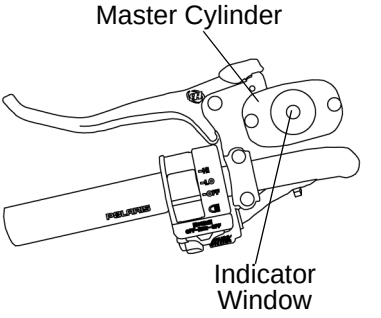

1. Position the ATV on a level surface.
2. Position the handlebars so the master cylinder is level.
3. View the brake fluid level through the indicator window on the top of the master cylinder. The eye will appear dark when the fluid level is full. When fluid is low, the eye will be clear.
4. If the fluid level is low, remove the cover screws and add fluid to the fill line. *Do not overfill.* Use DOT 4 brake fluid only.
5. Reinstall the cover. Torque screws to 7 in-lbs (.8 Nm).

Parking Brake

Locking the Parking Brake

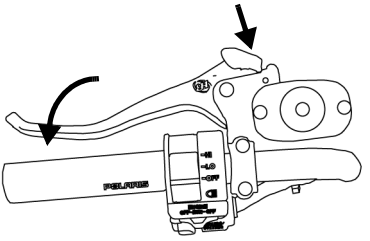

1. Place the transmission in PARK.
2. Squeeze and release the brake lever two or three times, then squeeze and hold.
3. Push the parking brake lock forward to engage the lock.
4. Release the brake lever.
5. To release the parking brake lock, squeeze and release the brake lever. It will return to its unlocked position.

WARNING! Operating the ATV while the parking brake is engaged could result in an accident or fire. Always check to be sure the parking brake is disengaged before operating.

The parking brake may relax if left on for a long period of time. Always block the wheels to prevent rolling. Always block the wheels on the downhill side of the ATV if leaving it parked on a hill. Another option is to park the ATV in a sidehill position. Never depend on the parking brake alone if the ATV is parked on a hill. Always block the wheels to prevent rolling.

Fuel Tank

Always refuel with the engine stopped, and outdoors or in a well ventilated area. Refuel on a level surface.

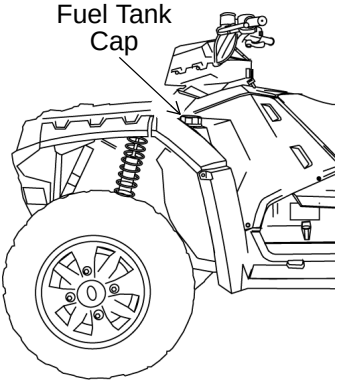

Remove the fuel tank cap and add fuel. Use either leaded or unleaded gasoline with a minimum pump octane number of 87=(R+ M/2) octane. *Do not use fuel with ethanol content greater than 10%, such as E-85 fuel.*

The fuel tank is designed to allow for the normal expansion of fuel. Do not overfill. Do not fill the tank neck.

FEATURES AND CONTROLS
Auxiliary Foot Brake

⚠ WARNING

Never back down a hill. Applying the auxiliary brake when backing down a hill may cause rear tipover, which could result in serious injury or death.

Use caution when applying the auxiliary brake. Do not aggressively apply the auxiliary brake when going forward. The rear wheels may skid and slide sideways, causing loss of control and serious injury or death.

The auxiliary brake system is intended to be used as a backup for the main brake system. Should the main system fail, use the auxiliary foot brake.

The auxiliary foot brake is located on the inside of the right footrest. Operate this brake with your right foot.

If the rear wheels slide while using the auxiliary brake, *reduce* brake pedal pressure to brake the rear wheels without skidding.

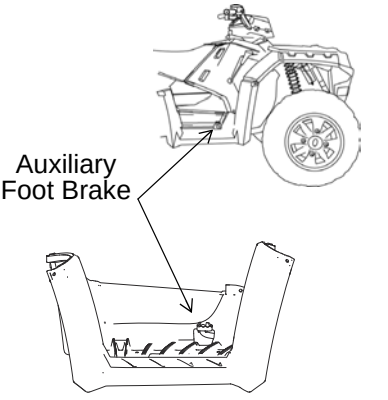

Brake Fluid Level

Check the brake fluid level frequently for the auxiliary brake system. The reservoir is located in the front compartment. See pages 38-39.

Maintain the fluid level between the maximum and minimum marks. Use DOT 4 brake fluid only.

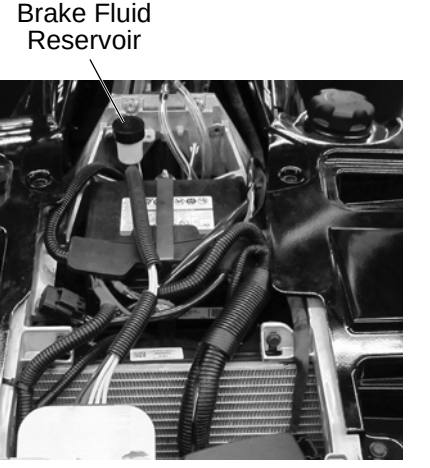

Automatic Transmission Gear Selector

The transmission gear selector is located on the right side of the vehicle.

H: High Gear

L: Low Gear

N: Neutral

R: Reverse

P: Park

To shift gears, brake to a complete stop. When the engine is idling, move the lever to the desired gear.

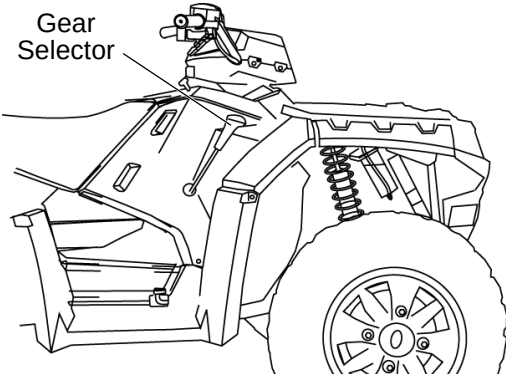

NOTICE: Shifting gears with the engine speed above idle or while the vehicle is moving could cause transmission damage.

Whenever the ATV is left unattended, always place the transmission in PARK and lock the parking brake.

Belt Life

To extend belt life, use low forward gear when pulling a heavy load at less than seven miles per hour for extended periods and when operating uphill at a slow speed.

FEATURES AND CONTROLS
Front Compartment

Open or remove the front rack, box or fan shroud to access the front compartment components.

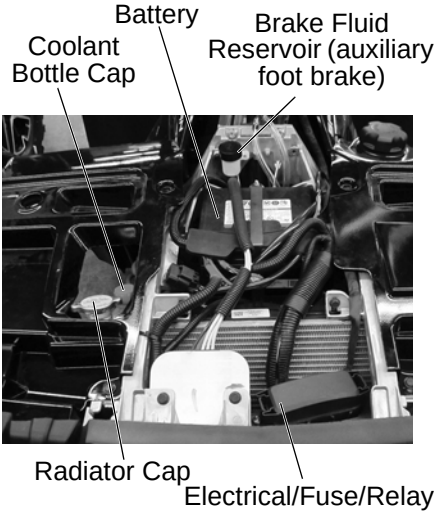

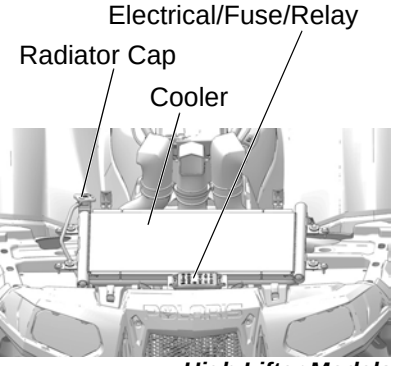

High Lifter Models

Fan Shroud (High Lifter)

Release the front fan shroud latches and remove the shroud to gain access to the front compartment. *Always reinstall the shroud and secure the latches before operating the vehicle.*

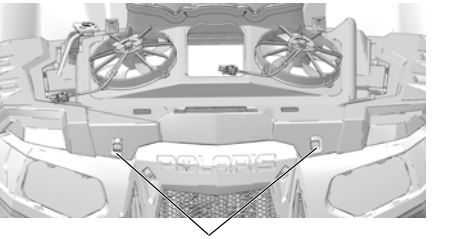

Front Compartment

Front Rack (1-Up, if equipped)

Release the front rack latches and remove the rack to gain access to the front compartment. To reinstall the rack, hold the rack as shown in the illustration. Position the front edge in the tabs, then push the rack downward and secure the latches.

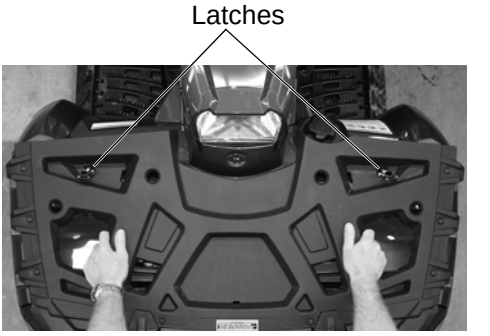

Front Storage Box (Touring)

Open the front storage box to access the under-compartment area.

1. Release the front box cover latches and lift the cover.
2. Release the plunger latches that secure the box to the frame.
3. Close the cover and lift the unlatched edge of the box to disengage the plungers. Pivot the box forward.
4. To remove the box completely, disengage the plungers and slide the box rearward and upward.
5. *Always secure the plunger latches and the cover latches before operating the vehicle.*



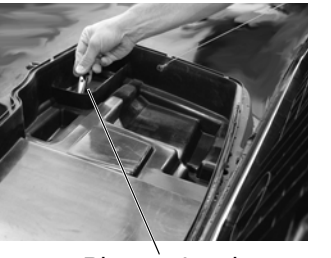

FEATURES AND CONTROLS

Electronic Power Steering (EPS)

Electronic power steering engages when the ignition key is turned to the ON position. EPS remains engaged whether the vehicle is moving or idle. See page 45 for EPS Warning Indicator information.

Extreme Use Battery

An optional extreme use battery may be available for your model. If the performance of the factory-installed battery is inadequate due to operation in extreme cold or due to extended use of multiple electrical accessories, your POLARIS dealer can assist. Your dealer can provide any installation procedures that may differ for an extreme use battery.

Beverage Holders (Touring)

This vehicle is equipped with beverage holders on each side of the rear of the seat. To secure a beverage or other container, remove the rubber retainer strap from one side of the holder. Place the container into the recess and reinstall the strap over the top of the container. Place one of the rubber cylinders through one of the holes to secure a strap.

When trailering the vehicle, and whenever a holder is not in use, always secure the rubber straps in one of the tighter positions to prevent loss of the retainer.

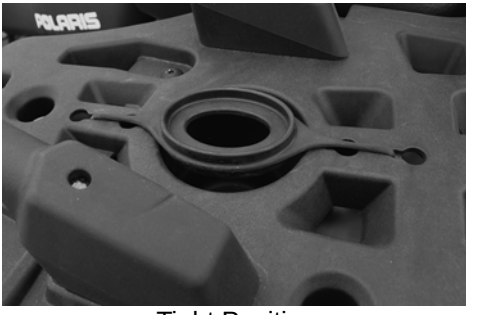

Tight Position



Less Tight Position

All Wheel Drive System

The All Wheel Drive system is controlled by the 4X4 switch.

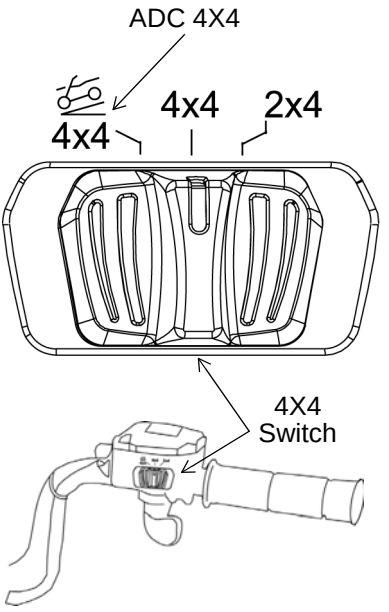

ADC 4X4 Mode

When the switch is on ADC 4X4, the ADC system allows engine braking to all four wheels when the vehicle descends a hill or incline. Always move the 4X4 switch to ADC 4X4 before ascending or descending a hill. See page 43.

4X4 Mode

When the switch is on 4X4, the ATV is in 4X4, and the 4X4 indicator icon in the instrument cluster display will be visible.

When in 4X4, the demand drive unit will automatically engage any time the rear wheels lose traction. When the rear wheels regain traction, the demand drive unit will automatically disengage.

There is no limit to the length of time the vehicle may remain in 4X4. The vehicle automatically engages 4X4 when operating in reverse if the switch is set to either 4X4 position.

2X4 Mode

When the switch is on 2X4, the ATV is in two-wheel drive at all times.

FEATURES AND CONTROLS
All Wheel Drive System
Engaging 4X4

The 4X4 switch may be turned on or off while the vehicle is moving. Initially, the vehicle's electronic system will not enable 4X4 until the engine RPM is below 3100. Once enabled, 4X4 remains enabled until the 4X4 switch is turned off. If the switch is turned off while the demand drive unit is moving, it will not disengage until the rear wheels regain traction.

Engage the 4X4 switch before getting into conditions where front wheel drive may be needed. If the rear wheels are spinning, release the throttle before switching to 4X4.

NOTICE: Switching to 4X4 or ADC 4X4 while the rear wheels are spinning may cause severe drive shaft and gearcase damage. Always switch to 4X4 or ADC 4X4 while the rear wheels have traction or are at rest.

Active Descent Control (ADC) System

The ADC system allows engine braking to all four wheels when the vehicle descends a hill or incline. Always move the 4X4 switch to ADC 4X4 before ascending or descending a hill.

Engaging Active Descent Control

The ADC system will automatically engage when *all four* of the following conditions occur:

- The 4X4 switch must be in the ADC 4X4 position
- Vehicle speed must be 15 mph (24 km/h) or less
- The throttle must be closed (throttle lever released)
- The transmission must be in gear (high, low or reverse)

Disengaging Active Descent Control

The ADC system will automatically disengage if *at least one* of the following conditions occur:

- The 4X4 switch is moved out of the ADC 4X4 position
- Vehicle speed exceeds 15 mph (24 km/h)
- The throttle is open (throttle is applied)
- The transmission is shifted to neutral or park

FEATURES AND CONTROLS
Instrument Cluster

NOTICE: High water pressure may damage ATV components. Wash the ATV by hand or with a garden hose using mild soap.

Certain products, including insect repellents and chemicals, will damage the speedometer lens and other plastic surfaces. Do not use alcohol to clean the instrument cluster. Do not allow insect sprays to contact the lens. Immediately clean off any gasoline that splashes on the instrument cluster.

Digital/Analog Gauge

Speedometer

The speedometer displays vehicle speed in either miles per hour (MPH) or kilometers per hour (km/h).

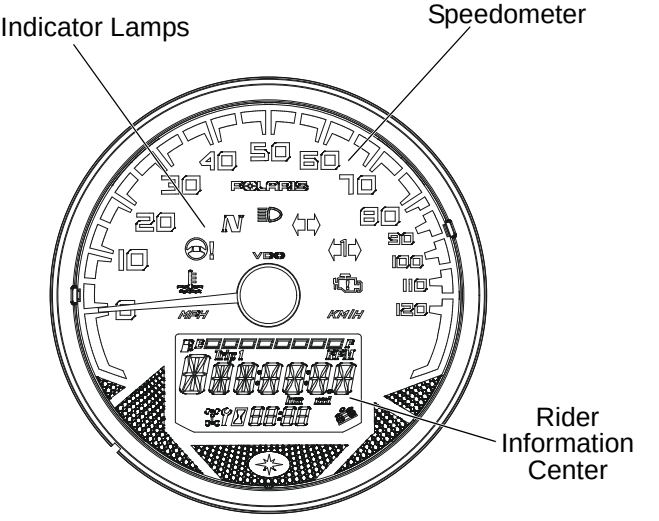

Instrument Cluster

Digital/Analog Gauge

Indicator Lamps

Lamp	Indicates	Condition
MPH	Vehicle Speed	When standard mode is selected, speed displays in miles per hour.
KM/H		When metric mode is selected, speed displays in kilometers per hour.
	Over Temperature	This lamp flashes to indicate an overheated engine. If the indicator stops flashing but remains illuminated, the overheating condition remains, and the system will automatically reduce engine power.
	EPS Warning	This indicator illuminates when the key is turned to the ON position and goes off when the engine is started. If the light remains on after starting the engine, the EPS system is inoperative. Your authorized POLARIS dealer can assist.
	Neutral	This lamp illuminates when the transmission is in neutral and the ignition key is in the ON position.
	High Beam (if equipped)	This lamp illuminates when the headlamp switch is set to high beam.
	Check Engine	This indicator appears if an EFI-related fault occurs. Do not operate the ATV if this warning appears. Serious engine damage could result. Your authorized POLARIS dealer can assist.

FEATURES AND CONTROLS

Instrument Cluster

Digital/Analog Gauge

Rider Information Center

The rider information center is located in the instrument cluster. All segments will light up for one second at start-up. If the instrument cluster fails to illuminate, a battery over-voltage may have occurred and the instrument cluster may have shut off to protect the electronic speedometer. If this occurs, your POLARIS dealer can provide proper diagnosis.

The information center is set to display standard units of measurement and a 12-hour clock at the factory. To change to metric and/or a 24-hour clock, see page 49.

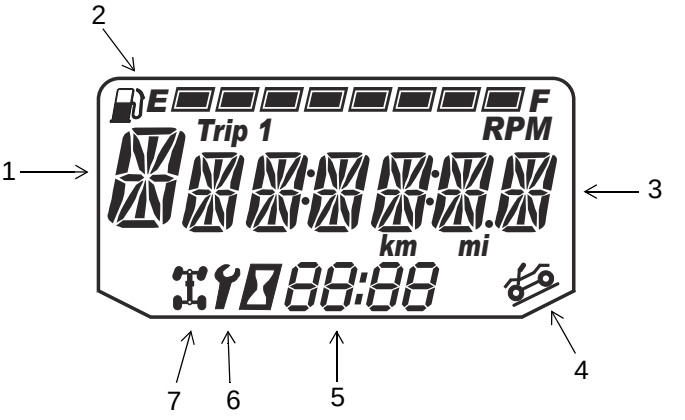

Instrument Cluster

Digital/Analog Gauge

Rider Information Center

1. **Gear Display** - This area displays gear shifter position.
   H = High Gear
   L = Low Gear
   N = Neutral
   R = Reverse Gear
   P = Park
   -- = Gear Signal Error (or shifter between gears)
2. **Fuel Gauge Display** - The segments of the fuel gauge show the level of fuel in the fuel tank. When the last segment clears, a low fuel warning is activated. All segments including the fuel icon will flash. Refuel immediately.

Tip: If the fuel icon fails to display, an open or short circuit has occurred in the fuel sensor circuit. Your authorized POLARIS dealer can assist.

3. **Information Display** - This area displays odometer, trip meter, engine hour meter, engine speed and programmable service hour interval.
4. **Active Descent Control Display -** This icon displays when ADC is active. See page 43.
5. **Clock Display** - The clock displays time in a 12-hour or 24-hour format. If the engine is turned off, press the MODE button. The time will display for 5-10 seconds. See page 49 for resetting instructions.
6. **Service Reminder Display** - A flashing wrench symbol alerts the operator that the preset service interval has been reached. Your POLARIS dealer can provide scheduled maintenance. See page 49 for resetting instructions.
7. **4X4 Display** - This icon displays when the 4X4 system is engaged (switch is on either ADC 4X4 or 4X4).

FEATURES AND CONTROLS
Instrument Cluster
Digital/Analog Gauge
Rider Information Center

The reverse override button acts as the MODE button when pressed and released quickly. The transmission cannot be in reverse when using the override button as a MODE button. This feature does not contain a vehicle speed lockout function and can be used at any operating speed.

Display Units (Standard/Metric)

The display can be changed to display either standard or metric units of measurement.

Tip: To exit the set-up mode at any time, wait 10 seconds. The display automatically exits and returns to the odometer display.

	Standard Display	Metric Display
Distance	Miles	Kilometers
Time	12-Hour Clock	24-Hour Clock

1. Turn the key to the OFF position.
2. Place the transmission in neutral.
3. Press and *hold* the MODE button while turning the key to the ON position.
4. When the display flashes the distance setting, tap the MODE button to advance to the desired setting.
5. Press and *hold* the MODE button to save the setting and advance to the next display option.
6. Repeat the procedure to change remaining display settings.

Instrument Cluster

Digital/Analog Gauge

Rider Information Center

Clock Mode

Tip: The clock must be reset any time the battery has been disconnected or discharged.

1. Turn the key to the ON position. Use the MODE button to toggle to the odometer display.
2. Press and *hold* the MODE button until the hour segment flashes. Release the button.
3. With the segment flashing, tap the MODE button to advance to the desired setting.
4. Press and *hold* the MODE button until the next segment flashes. Release the button.
5. Repeat steps 3-4 twice to set the 10-minute and 1-minute segments. After completing the 1-minute segment, step 4 will save the new settings and exit the clock mode.
6. Turn the key to the OFF position.

Odometer Mode

The odometer records and displays the distance traveled by the ATV.

Trip Meter Mode

The trip meter records the distance traveled by the ATV if reset before each trip. To reset, select the trip meter mode. Press and hold the MODE button until the meter resets to zero. In the Rider Information Center, the trip meter display contains a decimal point, but the odometer displays without a decimal point.

Hour Meter Mode

This mode logs the total hours the engine has been in operation.

FEATURES AND CONTROLS
Instrument Cluster
Digital/Analog Gauge
Rider Information Center
Programmable Service Interval

When the hours of engine operation equal the programmed service interval setting, the wrench icon will flash for 5 seconds each time the engine is started. When this feature is enabled, it provides a convenient reminder to perform routine maintenance. The service interval is programmed at 50 hours at the factory. Use the following procedure to change the service interval.

1. Press the MODE button until remaining service hours display.
2. Press and hold the MODE button.
3. When the service hours flash, press and release the MODE button to advance the hours to the desired setting (including OFF). Press and hold the MODE button to set the new service hour interval.

Diagnostic Display Mode

The EFI diagnostic display mode is for informational purposes only. Your POLARIS dealer can provide for all major repairs.

The diagnostic mode is accessible only when the check engine warning indicator activates after the key has been turned on. Leave the key on if you want to view the active code (failure code).

The diagnostic mode becomes inaccessible if the key is turned off and on and the warning indicator is no longer active. This allows the determination of persistent as well as intermittent faults.

Inactive codes are stored in the history of the unit.

Instrument Cluster

Digital/Analog Gauge

Rider Information Center

Engine Error Codes

The error screen displays only when the CHECK ENGINE light is on or when it goes on and off during one ignition cycle. Error codes are not stored in the gauge when the key is turned off. The code and message is lost, but will reappear if the fault reoccurs after restarting the engine.

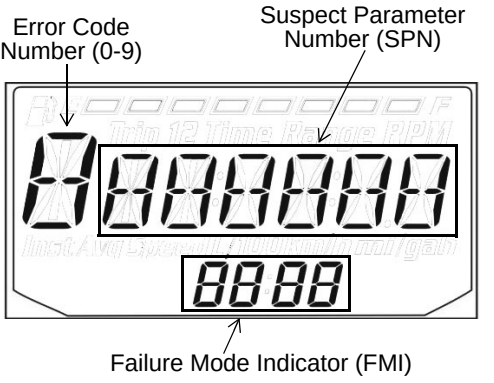

If the CHECK ENGINE light illuminates, retrieve the error codes from the display.

1. If the error codes are not displayed, use the MODE button to toggle until “Ck ENG” displays on the main line of the display.
2. Press and hold the MODE button to enter the diagnostics code menu.
3. Record the numbers displayed in the gear position (if any), clock and odometer displays.
4. Press the MODE button to advance to the next error code.
5. Press and hold the MODE button to exit the diagnostics code menu.
6. See pages 52-55 for code definitions and failure descriptions. Your authorized POLARIS dealer can provide code details and diagnosis.

FEATURES AND CONTROLS
Instrument Cluster
Diagnostic Display Code Definitions

Open Load: There is a break in the wires that lead to the item listed in the chart (injector, fuel pump, etc.), or the item has failed.

Short-to-Ground: The wire is shorted to ground between the electronic control unit and the item listed in the chart.

Shorted Load: The wires leading to the item listed in the chart are shorted together, or the item has shorted internally.

Short-to-Battery: The wire leading from the item listed in the chart to the electronic control unit is shorted to a wire at battery voltage.

Diagnostic Codes			
Component	Condition	SPN	FMI
Throttle Position Sensor	Voltage Too High	51	3
	Voltage Too Low	51	4
Engine Temperature Sensor	Voltage Too High	110	3
	Voltage Too Low	110	4
	Temperature Too High	110	16
	Engine Overheat Shutdown	110	0
Intake Air Temperature Sensor	Voltage Too High	105	3
	Voltage Too Low	105	4
Manifold Absolute Pressure Sensor	Voltage Too High	102	3
	Voltage Too Low	102	4
	Signal Out of Range	102	2
Crankshaft Position Sensor	Circuit Fault	636	8
	Plausibility Fault	636	2
Vehicle Speed Signal	Speed Too High	84	8
	Plausibility Fault	84	2
Gear Sensor Signal	Voltage Too Low	523	4
	Voltage too high	523	3
	Signal fault	523	2
Injector 1 (MAG) (SDI Part Load)	Driver Circuit Open/Grounded	651	5
	Driver Circuit Short to B+	651	3
	Driver Circuit Grounded	651	4
Injector 2 (PTO) (SDI Part Load)	Driver Circuit Open/Grounded	652	5
	Driver Circuit Short to B+	652	3
	Driver Circuit Grounded	652	4

Instrument Cluster

Diagnostic Display Code Definitions

Diagnostic Codes			
Component	Condition	SPN	FMI
Ignition Coil Primary Driver 1 (MAG)	Driver Circuit Short to B+	1268	3
Ignition Coil Primary Driver 2 (PTO)	Driver Circuit Short to B+	1269	3
Fuel Pump Driver Circuit	Driver Circuit Open/Grounded	1347	5
	Driver Circuit Short to B+	1347	3
	Driver Circuit Grounded	1347	4
Fan Relay Driver Circuit	Driver Circuit Open/Grounded	1071	5
	Driver Circuit Short to B+	1071	3
	Driver Circuit Grounded	1071	4
Idle Air Control	Driver Circuit Open/Grounded	634	5
	Driver Circuit Short to B+	634	3
	Driver Circuit Grounded	634	4
	Position Out of Range	634	7
Starter Enable Circuit	Driver Circuit Open/Grounded	1321	5
	Driver Circuit Short to B+	1321	3
	Driver Circuit Grounded	1321	4
Chassis Relay	Driver Circuit Open/Grounded	520208	5
	Driver Circuit Short to B+	520208	3
	Driver Circuit Grounded	520208	4
All Wheel Drive Control	Driver Circuit Open/Grounded	520207	5
	Driver Circuit Short to B+	520207	3
	Driver Circuit Grounded	520207	4
System Power	Voltage Too High	168	3
	Voltage Too low	168	4
Throttle Safety Signal	Voltage Too High	520194	3
	Voltage Too Low	520194	4
	Signal Out of Range	520194	2
	Throttle Stuck	520194	7
Active Descent Control System	Driver Circuit Open/Grounded	520203	5
	Driver Circuit Short to B+	520203	3
	Driver Circuit Grounded	520203	4
Idle Speed	Speed Too High	520211	3
	Speed Too Low	520211	4

FEATURES AND CONTROLS
Instrument Cluster
Diagnostic Display Code Definitions

Diagnostic Codes			
Component	**Condition**	**SPN**	**FMI**
EPS Models Only			
Vehicle Speed Sensor	Data Valid But Above Normal Operational Range - Most Severe Level	84	0
	Data Erratic, Intermittent Or Incorrect	84	2
	Abnormal Rate Of Change	84	10
	Received Network Data In Error	84	19
System Power	Data Valid But Above Normal Operational Range - Most Severe Level	168	0
	Voltage Above Normal, Or Shorted To High Source	168	3
	Voltage Below Normal, Or Shorted To Low Source	168	4
Engine Speed	Data Valid But Above Normal Operational Range - Most Severe Level	190	0
	Data Erratic, Intermittent Or Incorrect	190	2
	Received Network Data In Error	190	19
ECU Memory	Bad Intelligent Device Or Component	628	12
	Out Of Calibration	628	13
Calibration	Out Of Calibration	630	13
Steering Over Current Shut Down	Current Above Normal Or Grounded Circuit	520221	6
Steering Excessive Current Error	Current Above Normal Or Grounded Circuit	520222	6
Steering Torque Partial Failure	Condition Exists	520223	31
Steering Torque Full Failure	Condition Exists	520224	31

Instrument Cluster

Diagnostic Display Code Definitions

Diagnostic Codes			
Component	**Condition**	**SPN**	**FMI**
EPS Models Only			
EPAS Inverter Temperature	Data Valid But Above Normal Operational Range - Most Severe Level	520225	0
	Data Valid But Above Normal Operating Range - Moderately Severe Level	520225	16
EPAS Communications Receive Data Error	Data Erratic, Intermittent Or Incorrect	520226	2
	Condition Exists	520226	31
Position Encoder Error	Root Cause Not Known	520228	11
	Bad Intelligent Device Or Component	520228	12
	Condition Exists	520228	31
EPAS Software Error	Bad Intelligent Device Or Component	520229	12
	Condition Exists	520229	31
EPAS Power Save Condition	Condition Exists	520231	31
EPS SEPIC Voltage Error	Voltage Above Normal, Or Shorted To High Source	524086	3
	Voltage Below Normal, Or Shorted To Low Source	524086	4

OPERATION

⚠ WARNING

Failure to operate the ATV properly can result in a collision, loss of control, accident or overturn, which may result in serious injury or death. Read and understand all safety warnings outlined in the safety section of this owner's manual.

Break-In Period

The break-in period for your new POLARIS ATV is the first 20 hours of operation. No single action on your part is as important as following the procedures for a proper break-in. Careful treatment of a new engine and drive components will result in more efficient performance and longer life for these components.

NOTICE: Excessive heat build-up during the first three hours of operation will damage close-fitted engine parts and drive components. Do not operate at full throttle or high speeds during the first three hours of use.

Break-In Period

Engine and Drivetrain Break-in

1. Fill the fuel tank with gasoline. See page 35. Always exercise extreme caution whenever handling gasoline.
2. Check the engine oil level on the dipstick. See page 97. Add oil if necessary to maintain the level between the safe and add marks.
3. Drive slowly at first. Select an open area that allows room to familiarize yourself with vehicle operation and handling.
4. Vary the throttle positions. Do not operate at sustained idle.
5. Perform regular checks on fluid levels, controls and areas outlined on the daily pre-ride inspection checklist. See page 58.
6. Pull only light loads.
7. Check fluid levels of transmission and all gearcases after the first 25 hours of operation and every 100 hours thereafter.
8. Change both the oil and the filter at 25 hours.

PVT Break-in (Clutches/Belt)

A proper break-in of the clutches and drive belt will ensure a longer life and better performance. Break in the clutches and belt by operating at slower speeds during the break-in period as recommended. Pull only light loads. Avoid aggressive acceleration and high speed operation during the break-in period.

If a belt fails, always clean away all debris when replacing the belt.

OPERATION
Pre-Ride Checklist

Failure to inspect and verify that the ATV is in safe operating condition before operating increases the risk of an accident. Always inspect the ATV before each use to make sure it's in safe operating condition.

Item	Remarks	Page
Brake system/lever travel	Ensure proper operation	33 107
Brake fluid	Ensure proper level	34
Auxiliary brake	Ensure proper operation	36
Front suspension	Inspect, lubricate if necessary	96
Rear suspension	Inspect, lubricate if necessary	96
Steering	Ensure free operation	-
Tires	Inspect condition and pressure	111
Wheels/fasteners	Inspect, ensure fastener tightness	112
Frame nuts, bolts, fasteners	Inspect, ensure tightness	-
Fuel and oil	Ensure proper levels	35 97
Coolant level	Ensure proper level	105 106
Coolant hoses	Inspect for leaks	-
Throttle	Ensure proper operation	32 132
Indicator lights/switches	Ensure operation	30
Engine stop switch	Ensure proper operation	31
Air filter, pre-filter	Inspect, clean	113
Headlamp	Check operation	31 115
Brake light/taillight	Check operation	119
Riding gear	Wear approved helmet, goggles, and protective clothing	10
Winch (if equipped)	Inspect cable and switch	79-90

Safe Operation Practices

1. Complete the recommended safety training before operating this vehicle. See page 9.
2. Do not allow anyone under 16 years of age to operate this vehicle. Do not allow anyone with cognitive or physical disabilities to operate this vehicle.
3. Never carry a passenger on a 1-up ATV. Never carry more than one passenger on a 2-up ATV.
4. Engine exhaust fumes are poisonous. Never start the engine or let it run in an enclosed area.
5. Before operating, learn how to use the auxiliary brake for emergency situations (if service brakes become inoperable).
6. Operate this vehicle off-road only. Never operate the vehicle on pavement or on any public street, road or highway, including dirt and gravel roads.
7. Use caution and drive at reduced speeds in conditions of reduced visibility such as fog, rain and darkness. Clean headlights frequently and replace burned out headlamps promptly.
8. Drive in a manner appropriate for your skills, your passenger's skills and operating conditions. Never operate at excessive speeds. Never attempt wheelies, jumps, or other stunts. Never remove your hands from the handlebars while operating, and always keep both feet on the footrests.
9. Never consume alcohol or drugs before or while operating an ATV.
10. Always use the size and type of tires specified for your vehicle. Always maintain proper tire pressure.
11. Never operate a damaged ATV. After any overturn or accident, have a qualified service dealer inspect the entire machine for possible damage.
12. Never operate the ATV on a frozen body of water unless you have independently verified that the ice is sufficiently thick to support the weight and moving force of the ATV, you and your cargo, together with any other vehicles in your party.
13. Do not touch hot exhaust system components. Always keep combustible materials away from the exhaust system.
14. Always remove the ignition key when the vehicle is not in use to prevent unauthorized use.

OPERATION

Know Your Riding Area/Tread Lightly

Familiarize yourself with all laws and regulations concerning the operation of this off-road vehicle in your area. Respect the environment in which you ride. Find out where the designated riding areas are by contacting your POLARIS dealer, a local riding club or local officials.

Help keep our trails open for recreational vehicle use. As an off-road enthusiast, you represent the sport and can set a good example (or a poor example) for others to follow. Tread lightly. Operate with respect for the terrain, avoid littering, and always stay on the designated trails.

Trail Etiquette

Always practice good etiquette when riding. Allow a safe distance between your vehicle and other vehicles operating in the same area. Communicate to oncoming operators by signaling the number of vehicles in your group. When stopping, move your vehicle to the edge of the trail as far as possible to allow others to pass safely.

Starting the Engine

1. Position the vehicle on a level surface outdoors or in a well-ventilated area.
2. Place the transmission in PARK.
3. Lock the parking brake.

Tip: The starter interlock will prevent the engine from starting if the transmission is in gear and the brake is not engaged.

4. Sit on the vehicle and move the engine stop switch to RUN.

Tip: Do not press the throttle while starting the engine.

5. Turn the ignition key past the ON position to engage the starter. Activate the starter for a maximum of five seconds, releasing the key when the engine starts.
6. If the engine does not start, return the key to the OFF position and wait five seconds before attempting to start again. Activate the starter for another five seconds if necessary. Repeat this procedure until the engine starts.

NOTICE: Operating the vehicle immediately after starting could cause engine damage. Allow the engine to warm up for several minutes before operating the vehicle.

Cold Weather Operation

If the ATV is used year-round, check the oil level frequently. A rising oil level could indicate the accumulation of contaminates such as water or excess fuel in the bottom of the crankcase. Water in the bottom of the crankcase can lead to engine damage and must be drained. Water accumulation increases as outside temperature decreases.

If a belt fails, always clean away all debris when replacing the belt.

OPERATION
Driving Procedures

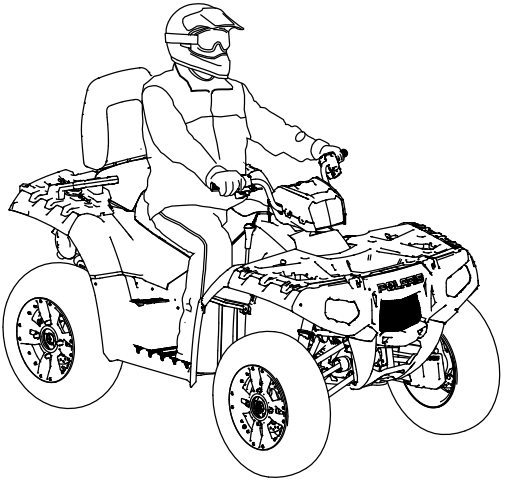

1. Wear protective riding gear. See page 10.
2. Perform the pre-ride inspection. See page 58.
3. Place the transmission in PARK.
4. Lock the parking brake.
5. Mount the vehicle from the left side.
6. Sit upright with both feet on the footrests and both hands on the handlebars.
7. Start the engine and allow it to warm up.
8. Shift the transmission into gear.
9. Check your surroundings and determine your path of travel.
10. Release the parking brake.
11. Slowly depress the throttle with your right thumb and begin driving.
12. Drive slowly. Practice maneuvering and using the throttle and brakes on level surfaces.

Turning the Vehicle

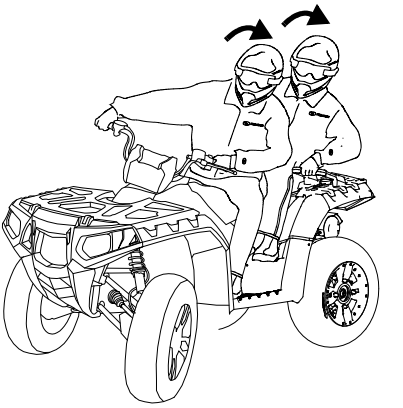

Both rear wheels drive equally at all times. This means that the outside wheel must travel a greater distance than the inside wheel when turning, and the inside tire must slip traction slightly.

1. Slow down.
2. Never turn quickly when carrying a passenger or cargo.
3. Steer in the direction of the turn.
4. Keep both feet on the footrests.
5. Lean your upper body to the inside of the turn while supporting your weight on the outer footrest. This technique alters the balance of traction between the rear wheels, allowing the turn to be made smoothly. The same leaning technique should be used for turning in reverse.
6. Practice making turns at slow speeds before attempting to turn at faster speeds.

WARNING! Turning improperly can result in vehicle overturn. Never turn abruptly or at sharp angles. Never turn at high speeds.

OPERATION
Driving with a Passenger

1. Never carry a passenger on a 1-up ATV. Never carry more than one passenger on a 2-up ATV.
2. Do not carry a passenger on a 2-up ATV until you have at least two hours of driving experience with the vehicle.
3. Never allow anyone under 12 years of age to ride as a passenger on a 2-up ATV. Make sure any passenger is tall enough to comfortably and safely reach the grab handles and footrests.
4. Make sure the passenger is wearing appropriate riding gear, including an approved helmet with a rigid chin guard. See page 10.
5. Perform the pre-ride inspection. See page 58.
6. Lock the parking brake.
7. Mount the vehicle from the left side. After the operator is seated, the passenger should mount the vehicle from the left side. Always make sure the brake is engaged to ensure the vehicle remains motionless whenever a passenger mounts or dismounts.
8. A passenger should always be seated in the passenger seat with both feet on the footrests and both hands on the passenger grab handles at all times. The passenger should never hold on to the operator. Never secure a passenger to the vehicle or to the operator with a belt, rope or similar device.
9. Slow down. Control may be more difficult with a passenger on board. Allow more time and distance for braking.
10. Ride to the ability of your passenger, instead of to your own ability. Avoid unexpected or aggressive maneuvers that could cause a passenger to fall from the vehicle.

Driving with a Passenger

11. Do not cross a hillside with a passenger on board. See page 68.
12. Make sure the passenger understands the importance of "active riding." When hill-climbing or performing maneuvers, a passenger should shift body weight in the same manner in which the driver shifts body weight. For example, the passenger should lean to the inside of a turn along with the operator and should always lean uphill when climbing and descending hills.

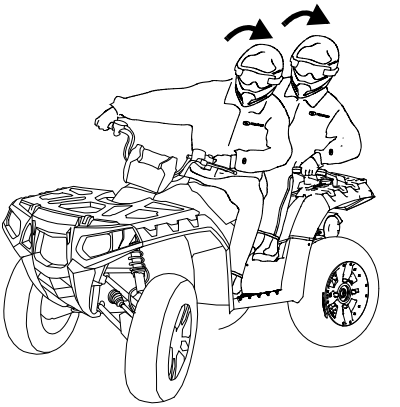

OPERATION
Driving on Slippery Surfaces

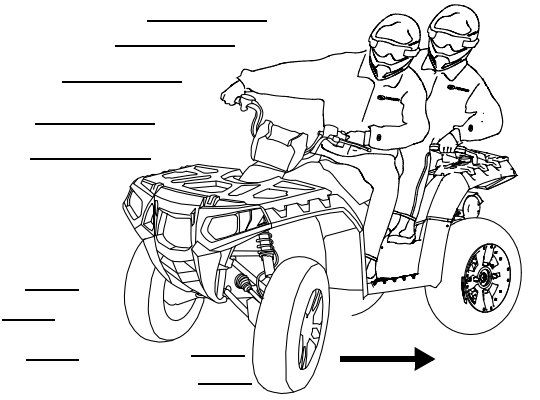

Whenever riding on slippery surfaces such as wet trails or loose gravel, or during freezing weather, follow these precautions:

1. Do not operate on excessively rough, slippery or loose terrain.
2. Slow down when entering slippery areas.
3. Engage 4X4 before wheels begin to lose traction.

NOTICE: Severe damage to drive train may occur if the 4X4 is engaged while the wheels are spinning. Allow the rear wheels to stop spinning before engaging 4X4, or engage 4X4 before wheels begin to lose traction.

4. Maintain a high level of alertness, reading the trail and avoiding quick, sharp turns, which can cause skids.
5. Never apply the brakes during a skid. Correct a skid by turning the handlebars in the direction of the skid and shifting your body weight forward.

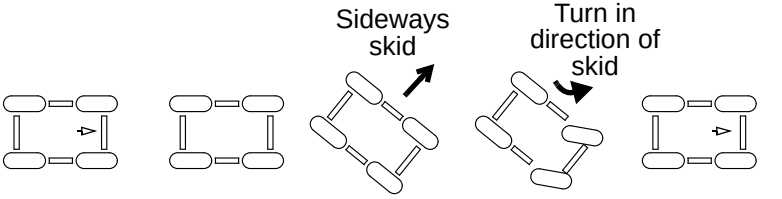

Driving Uphill

Braking and handling are greatly affected when operating in hilly terrain. Improper procedure could cause loss of control or overturn. Whenever traveling uphill, follow these precautions:

1. Always move the 4X4 switch to ADC 4X4 before ascending or descending a hill. See page 43.
2. Drive straight uphill.
3. Avoid steep hills. Maximum incline is:
   - 15° (2-Up Models)
   - 25° (1-Up Models)
4. Always check the terrain carefully before ascending any hill.
5. Never climb hills with excessively slippery or loose surfaces.
6. Keep both feet on the footrests.
7. Shift body weight uphill. A passenger should also shift body weight uphill.
8. Proceed at a steady rate of speed and throttle opening. Opening the throttle suddenly could cause the ATV to flip over backwards.

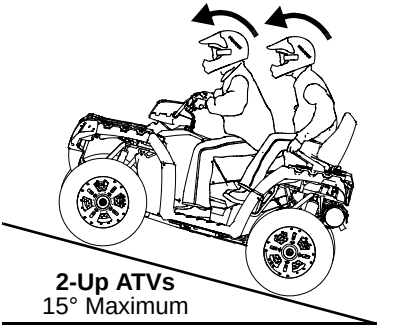

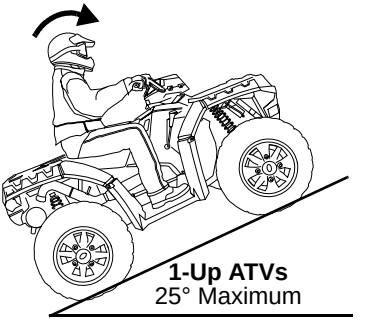

9. Never go over the top of any hill at high speed. An obstacle, a sharp drop, or another vehicle or person could be on the other side of the hill.
10. Remain alert and be prepared to take emergency action. This may include quick dismounting of the vehicle.

OPERATION
Driving on a Sidehill (Sidehilling)

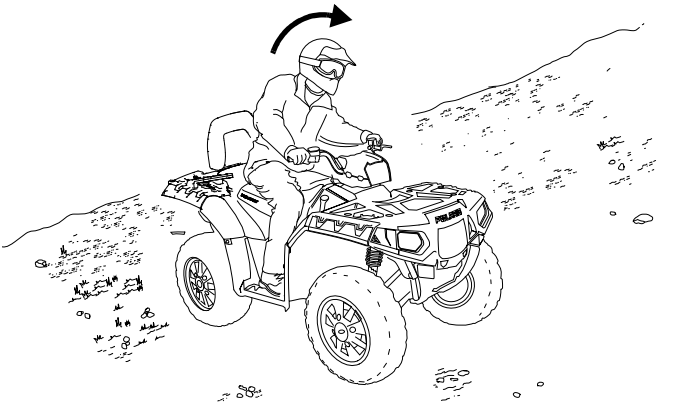

Driving on a sidehill is not recommended. Improper procedure could cause loss of control or overturn. Avoid crossing the side of any hill unless absolutely necessary.

If crossing a sidehill is *unavoidable*, follow these precautions:

1. Slow down.
2. Avoid crossing the side of a steep hill.
3. Do not cross a hillside with a passenger on board. Ask the passenger to dismount and walk across the hillside before remounting the vehicle.
4. Lean into the hill, transferring your upper body weight toward the hill while keeping your feet on the footrests.
5. If the vehicle begins to tip, quickly turn the front wheel downhill, if possible, or dismount on the uphill side *immediately*!

Driving Downhill

When driving downhill, follow these precautions:

1. Always check the terrain carefully before descending a hill.
2. Always move the 4X4 switch to ADC 4X4 before ascending or descending a hill. See page 43.
3. Avoid steep hills. Maximum incline is:
   - 15° (2-Up Models)
   - 25° (1-Up Models)
4. Always descend a hill with the transmission in forward gear. Do not descend a hill with the transmission in neutral.
5. Slow down. Never travel down a hill at high speed.
6. Drive straight downhill. Avoid traveling down a hill at an angle, which would cause the vehicle to lean sharply to one side.
7. Shift body weight uphill. A passenger should also shift body weight uphill.
8. Apply the brakes *slightly* to aid in slowing. Applying the brakes too firmly may cause the rear wheels to lock, which could result in loss of control.

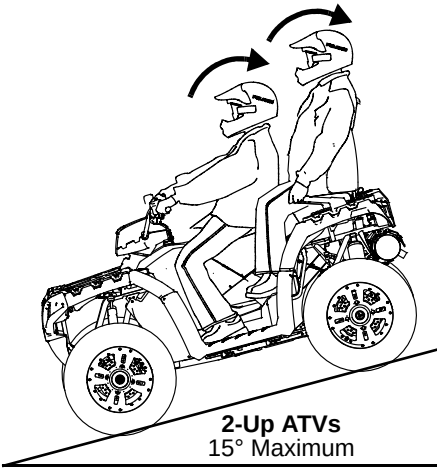

2-Up ATVs
15° Maximum

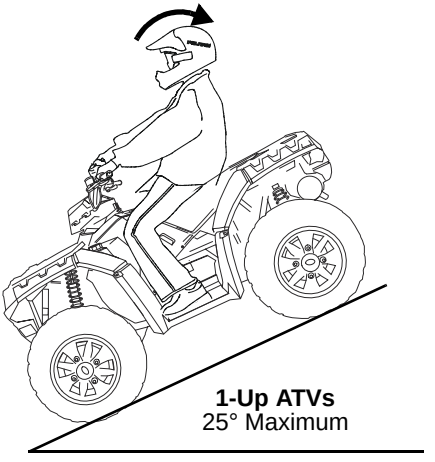

1-Up ATVs
25° Maximum

OPERATION
Turning Around on a Hill (K-Turn)

If the vehicle stalls while climbing a hill, never back it down the hill! Use the K-turn to turn around.

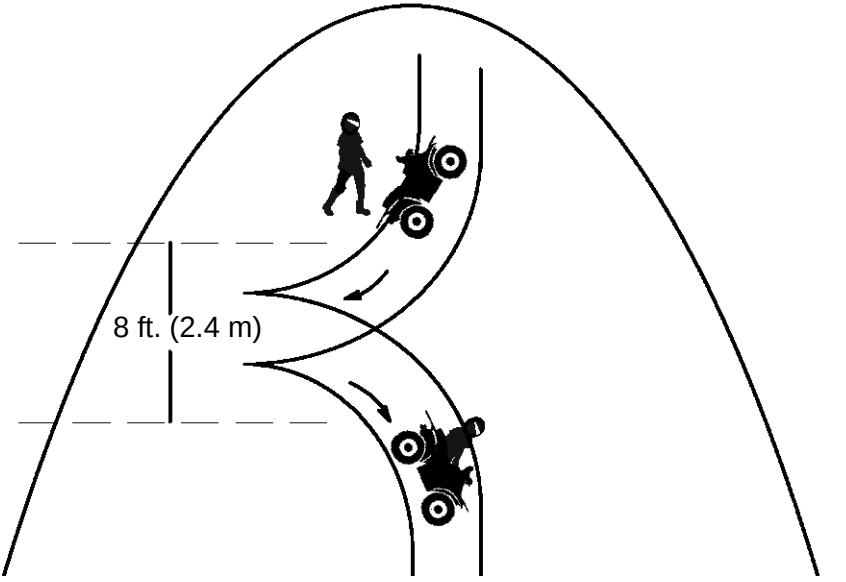

Turning Around on a Hill (K-Turn)

1. Stop and lock the parking brake while keeping body weight uphill.
2. Always move the 4X4 switch to ADC 4X4 before ascending or descending a hill. See page 43.
3. Leave the transmission in forward and shut off the engine.
4. If a passenger is on board, ask the passenger to dismount first, then the operator may dismount. Dismount on the uphill side of the vehicle, or on the left if the vehicle is pointing straight uphill. *A passenger should not remount until the vehicle returns to firm, level ground.*
5. Staying uphill of the vehicle, turn the handlebars full left.
6. While holding the brake lever, release the parking brake lock and slowly allow the vehicle to roll around to your right until it's pointing across the hill or slightly downward.
7. Lock the parking brake. Remount the vehicle from the uphill side, keeping body weight uphill. A passenger should not remount until the vehicle returns to firm, level ground.
8. Start the engine with the transmission still in forward.
9. Release the parking brake and proceed *slowly*, controlling speed with the brake lever, until the vehicle is on more level ground.

OPERATION
Driving Through Water

Your ATV can operate through water with a maximum recommended depth equal to the bottom of the footrests. Follow these procedures when operating through water:

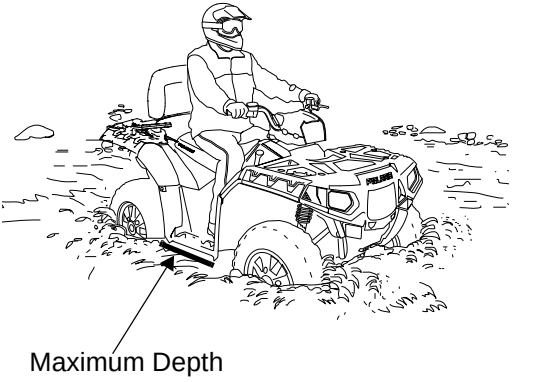

1. Determine water depths and current before entering water.
2. Choose a crossing where both banks have gradual inclines.
3. Avoid operating through deep or fast-flowing water.

NOTICE: Major engine damage can result if the vehicle is not thoroughly inspected after operation in water. Perform the services outlined in the maintenance chart. See page 92. The following areas need special attention: engine oil, transmission oil, demand drive fluid and all grease fittings.

If the vehicle tips or overturns in water, or if the engine stops during or after operating in water, service is required before starting the engine. Your POLARIS dealer can provide this service. If it's impossible to bring the vehicle in before starting the engine, perform the service outlined on page 122, and take the vehicle in for service at the first opportunity.

4. After leaving water, test the brakes. Apply them lightly several times while driving slowly. The friction will help dry out the pads.

If it's unavoidable to enter water deeper than the footrest level:

- Proceed slowly. Avoid rocks and obstacles.
- Balance your weight carefully. Avoid sudden movements.
- Maintain a steady rate of speed. Do not make sudden turns or stops. Do not make sudden throttle changes.

Driving Over Obstacles

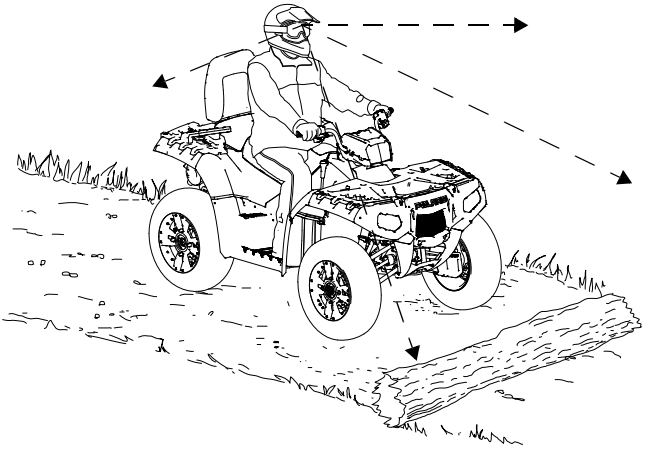

Follow these precautions when operating over obstacles:

1. Always check for obstacles before operating in a new area.
2. Look ahead and learn to read the terrain. Be constantly alert for hazards such as logs, rocks and low hanging branches.
3. Travel slowly and use extra caution when operating on unfamiliar terrain. Not all obstacles are immediately visible.
4. Never attempt to operate over large obstacles, such as rocks or fallen trees.
5. Always have a passenger dismount before operating over an obstacle that could cause a fall from the vehicle or vehicle tipover.

OPERATION
Driving in Reverse

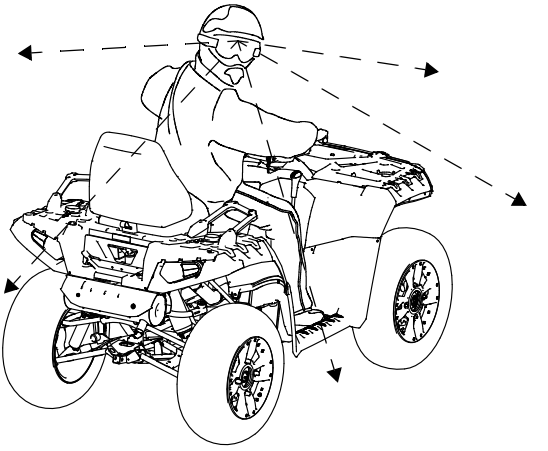

Follow these precautions when operating in reverse:

1. Always check for obstacles or people behind the vehicle. Be aware that a passenger can obstruct your view.
2. Always avoid backing downhill.
3. Back slowly.
4. Apply the brakes *lightly* for stopping.
5. Avoid turning at sharp angles.
6. Never open the throttle suddenly.
7. Do not use the override switch unless additional wheel speed is required for vehicle movement. Use the override with caution as rearward vehicle speed is greatly increased. Do not operate at wide open throttle. Operate the throttle just enough to maintain a desired speed.

NOTICE: Excessive throttle operation while in the speed limit mode may cause fuel to build in the exhaust, resulting in engine popping and/or engine damage.

Parking on an Incline

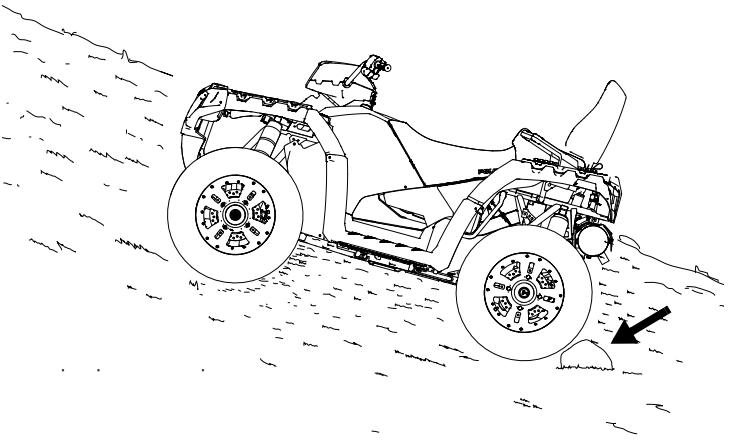

Avoid parking on an incline if possible. If it's unavoidable, follow these precautions:

1. Stop the engine.
2. Place the transmission in PARK.
3. Lock the parking brake.
4. Always block the rear wheels on the downhill side.

OPERATION
Hauling Cargo

⚠ WARNING

Overloading the vehicle or carrying or towing cargo improperly can alter vehicle handling and may cause loss of control or brake instability, which can result in serious injury or death. Always follow these precautions when hauling cargo:

REDUCE SPEED AND ALLOW GREATER DISTANCES FOR BRAKING WHEN HAULING CARGO.

NEVER EXCEED THE MAXIMUM WEIGHT CAPACITY of the vehicle. When determining the weight you are adding to the vehicle, include the weight of the operator, passenger, accessories, loads in the rack or box and the load on the trailer tongue. The combined weight of these items must not exceed the maximum weight capacity.

CARGO WEIGHT DISTRIBUTION for models equipped with front rack/box and a rear rack should be 1/3 on the front rack/box and 2/3 on the rear rack. When operating over rough or hilly terrain, reduce speed and cargo to maintain stable driving conditions. Carrying loads on only one rack increases the possibility of vehicle overturn.

CARRY LOADS AS LOW ON THE RACKS AS POSSIBLE. Carrying loads high on the racks raises the center of gravity of the vehicle and creates a less stable operating condition.

SECURE ALL LOADS BEFORE OPERATING. Unsecured loads can create unstable operating conditions, which could result in loss of control of the vehicle.

OPERATE ONLY WITH STABLE AND SAFELY ARRANGED LOADS. When handling off-centered loads that cannot be centered, securely fasten the load and operate with extra caution. Always attach the tow load to the hitch point designated for your vehicle.

HEAVY LOADS CAN CAUSE BRAKING AND CONTROL PROBLEMS. Use extreme caution when applying brakes with a loaded vehicle. Avoid terrain or situations that may require backing downhill.

USE EXTREME CAUTION when operating with loads that extend over the rack sides. Stability and maneuverability may be adversely affected, causing the vehicle to overturn.

DO NOT BLOCK THE FRONT HEADLIGHT BEAM when carrying loads on the front rack.

DO NOT TRAVEL FASTER THAN THE RECOMMENDED SPEEDS.

The vehicle should never exceed 10 mph (16 kph) while towing a load on a level surface. Vehicle speed should never exceed 5 mph (8 kph) when towing loads in rough terrain, while cornering, or while ascending or descending a hill.

Hauling Cargo

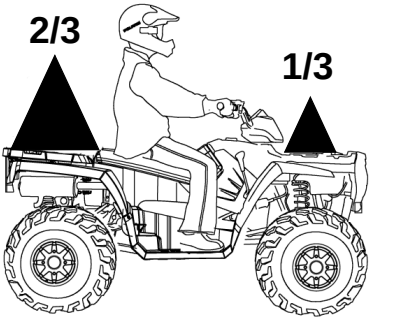

1. Never exceed the weight capacities specified for your ATV on warning labels and in the specifications section of this manual.
2. On models equipped with a front rack/box and a rear rack, cargo weight should be evenly distributed (1/3 on the front rack and 2/3 on the rear rack) and mounted as low as possible.
3. When operating over rough or hilly terrain, reduce speed and cargo weight to maintain stable driving conditions.
4. ***All 2-Up Models:***
   NEVER exceed 50 MPH (80 km/h) while carrying a passenger.
5. ***All Models Except High Lifter:***
   NEVER exceed 50 MPH (80 km/h) when rear cargo loads are above 75 lbs. (34 kg) and/or front cargo loads are above 37 lbs. (17 kg).
   NEVER exceed 10 MPH (16 km/h) when rear cargo loads are above 200 lbs. (91 kg) and/or front cargo loads are above 100 lbs. (45 kg).
6. Do not obstruct the headlight beam with cargo.
7. Slow down.
8. Use low forward gear when hauling or towing heavy cargo to extend belt life.
9. Always operate the vehicle with extreme caution whenever hauling or towing loads. Balance, handling and control may be affected.

OPERATION
Hauling Cargo
Towing Loads

Always attach a towed load to the hitch point. Remove the hitch from the ATV when not towing a trailer. If towing a load, reduce rear rack cargo weight by the amount of tongue weight.

- The combination of rear rack cargo weight and tongue weight must not exceed the rear rack capacity.
- The total load (operator, passenger, accessories, cargo and weight on hitch) must not exceed the maximum weight capacity of the vehicle.

NOTICE: Using an improper hitch or exceeding the maximum tongue weight capacity can result in serious damage to the vehicle and will void your ATV warranty. Never install a hitch longer than 4" (10 cm). Never install automotive accessories on your POLARIS ATV. Always install POLARIS-approved (or equivalent) accessories designed for ATV use.

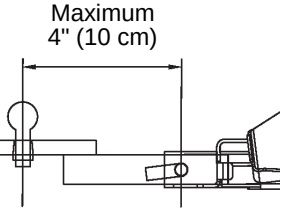

Maximum Towing Capacities

Do not exceed maximum towing capacities. Avoid towing on inclines.

	850 SP	XP 1000
Maximum Towed Load (Level Ground)	1500 lbs. (680 kg)	1500 lbs. (680 kg)
Maximum Vertical Hitch Weight	150 lbs. (68 kg)	150 lbs. (68 kg)

These safety warnings and instructions apply if your vehicle came equipped with a winch or if you choose to add an accessory winch to your vehicle.

⚠ WARNING

Improper winch use can result in SEVERE INJURY or DEATH. Always follow all winch instructions and warnings in this manual.

Your winch may have a cable made of either wire rope or specially designed synthetic rope. The term “winch cable” will be used for either unless noted otherwise.

Winch Safety Precautions

1. Read all sections of this manual.
2. Never use alcohol or drugs before or while operating the winch.
3. Never allow children under 16 years of age to operate the winch.
4. Always wear eye protection and heavy gloves when operating the winch.
5. Always keep body, hair, clothing and jewelry clear of the winch cable, fairlead and hook when operating winch.
6. Never attempt to “jerk” a load attached to the winch with a moving vehicle. See the *Shock Loading* section on page 88.
7. Always keep the area around the vehicle, winch, winch cable and load clear of people (especially children) and distractions while operating the winch.
8. Always turn the vehicle ignition power OFF when it and the winch are not being used.
9. Always be sure that at least five (5) full turns of winch cable are wrapped around the winch drum at all times. The friction provided by this wrapped cable allows the drum to pull on the winch cable and move the load.
10. Always apply your vehicle’s park brake and/or park mechanism to hold the vehicle in place during winching. Use wheel chocks if needed.

WINCH GUIDE
Winch Safety Precautions

11. Always align the vehicle and winch with the load directly in front of the vehicle as much as possible. Avoid winching with the winch cable at an angle to the winching vehicle's centerline whenever possible.
12. If winching at an angle is unavoidable, follow these precautions:
    A. Look at the winch drum occasionally. Never let the winch cable "stack" or accumulate at one end of the winch drum. Too much winch cable at one end of the winch drum can damage the winch and the winch cable.
    B. If stacking occurs, stop winching. Follow step 15 on page 86 to feed and rewind the cable evenly before continuing the winch operation.
13. Never winch up or down at sharp angles. This can destabilize the winching vehicle and possibly cause it to move without warning.
14. Never attempt to winch loads that weigh more than the winch's rated capacity.
15. The winch motor may become hot during winch use. If you winch for more than 45 seconds, or if the winch stalls during operation, stop winching and permit the winch to cool down for 10 minutes before using it again.
16. Never touch, push, pull or straddle the winch cable while winching a load.
17. Never let the winch cable run through your hands, even if wearing heavy gloves.
18. Never release the clutch on the winch when the winch cable is under load.
19. Never use the winch for lifting or transporting people.

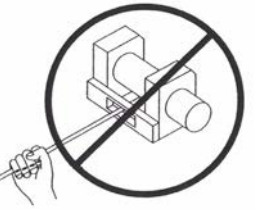

Winch Safety Precautions

20. Never use the winch to hoist or suspend a vertical load.
21. Never immerse or submerse your winch in water. Your dealer can provide service on your winch if this occurs.
22. Always inspect your winch and winch cable before each use.
23. Never winch the hook fully into the winch. This can cause damage to winch components.
24. Unplug the remote control from the vehicle when the winch is not in use to prevent inadvertent activation and use by unauthorized persons.
25. Never grease or oil the winch cable. This will cause the winch cable to collect debris that will shorten the life of the cable.

WINCH GUIDE
Winch Operation

Read the *Winch Safety Precautions* in the preceding pages before using your winch.

Tip: Consider practicing the operation and use of your winch before you actually need to use it in the field.

⚠ WARNING

Improper winch use can result in SEVERE INJURY or DEATH. Always follow all winch instructions and warnings in this manual.

Each winching situation is unique.

- Take your time to think through the winching you are about to do.
- Proceed slowly and deliberately.
- Never hurry or rush during winching.
- Always pay attention to your surroundings.
- You may need to change your winching strategy if it is not working.
- Always remember that your winch is very powerful.
- There are simply some situations that you and your winch will not be able to deal with. Do not be afraid to ask others to help when this happens.

1. Always inspect the vehicle, winch, winch cable and winch controls for any signs of damage or parts in need of repair or replacement before each use. *Pay particular attention to the first 3 feet (1 meter) of winch cable if the winch is being used (or has been used) for lifting an accessory plow assembly.* Promptly replace any worn or damaged cable.
2. Never operate a winch or a vehicle in need of repair or service.
3. Always apply your vehicle's park brake and/or park mechanism to hold the vehicle in place during winching. Use wheel chocks if needed.

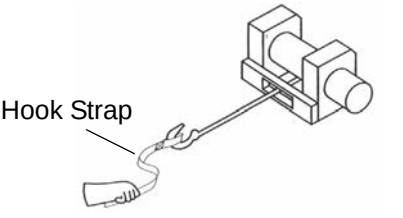

Winch Operation

4. Always use the hook strap when handling the hook.

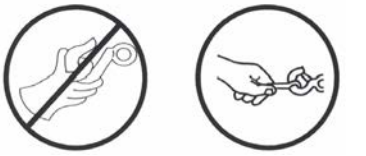

WARNING! Never put your fingers into the hook. This could lead to SEVERE INJURY.

A. Attach the hook itself onto the load or use a tow strap or chain to secure the load to the winch cable.

Tip: A “tow strap” is NOT intended to stretch. A “recovery strap” is designed to stretch.

WARNING! Never use a recovery strap when winching due to the excessive energy that can be released if the winch cable breaks. This can result in SEVERE INJURY or DEATH. See the *Shock Loading* section on page 88.

B. Never hook the winch cable back onto itself. This will damage the winch cable and may result in winch cable failure.

WARNING! Replace the winch cable at the first sign of damage to prevent SEVERE INJURY or DEATH in the event of failure. For your safety, always replace POLARIS winch parts (including the cable) with genuine POLARIS replacement parts available at your authorized POLARIS dealer.

C. If possible, keep the winch cable aligned with the centerline of the winching vehicle. This will help the spooling of the winch cable and reduce the load on the fairlead.

D. If freeing a stuck vehicle by attaching to a tree, use an item such as a tow strap to avoid damaging the tree during winch operation. Sharp cables and chains can damage and even kill trees. Please remember to TreadLightly® (treadlightly.org).

E. Before operating the winch, be sure that the safety latch on the winch cable hook is fully seated when the load is attached.

F. Never operate your winch with a damaged hook or latch. Always replace damaged parts before using the winch.

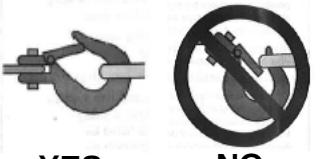

WINCH GUIDE
Winch Operation

5. Never remove the hook strap from the hook.
6. Release the winch clutch and pull out the winch cable.
7. Pulling out as much cable as possible maximizes the winch's pulling capacity. Always be sure that at least five (5) full turns of winch cable are wrapped around the winch drum at all times. The friction provided by this wrapped cable allows the drum to pull on the winch cable and move the load.
8. Read and adhere to the following information for winch damping to ensure safe winch use.
   A. In order to absorb energy that could be released by a winch cable failure, always place a "damper" on the winch cable. A damper can be a heavy jacket, tarp, or other soft, dense object. A damper can absorb much of the energy released if a winch cable breaks when winching. Even a tree limb can help as a damper if no other items are available to you.
   B. Lay the damper on top of the mid-point of the winch cable length that is spooled out.
   C. On a long pull, it may be necessary to stop winching so that the damper can be repositioned to the new mid-point of the winch cable. Always release the tension on the winch cable before repositioning the damper.
   D. Avoid being directly in line with the winch cable whenever possible. Also, never permit others to stand near or in line with the winch cable during winch operation.
9. Never hook the winch cable back onto itself. This will damage the winch cable and may result in winch cable failure.
10. Never use straps, chains or other rigging items that are damaged or worn.

Winch Operation

11. The ONLY time a winch-equipped vehicle should be moving when using the winch is when that vehicle itself is stuck. The winch-equipped vehicle should NEVER be in motion to "shock" load the winch cable in an attempt to move a second stuck vehicle. See the *Shock Loading* section on page 88. For your safety, always follow these guidelines when winching a vehicle free:
    A. Release the winch clutch and spool out the necessary length of winch cable.
    B. Align the winch cable as close as possible to the winching vehicle's centerline.
    C. Attach the winch cable hook to the anchor point or the stuck vehicle's frame following instructions in this manual.
    D. Re-engage the clutch on the winch.
    E. Slowly winch in the slack in the winch cable.
    F. Select the proper vehicle gear to propel the stuck vehicle in the direction of winching.
    G. Shift to the lowest gear available on the stuck vehicle.
    H. Slowly and carefully apply vehicle throttle and winch together to free the vehicle.
    I. Stop winching as soon as the stuck vehicle is able to propel itself without the help of the winch.
    J. Detach the winch cable hook.
    K. Rewind the winch cable evenly back onto the winch drum following the instructions in this manual.
12. Never attempt to winch another stuck vehicle by attaching the winch cable to a suspension component, brush guard, bumper or cargo rack. Vehicle damage may result. Instead, attach the winch to a strong portion of the vehicle frame or hitch.

WINCH GUIDE
Winch Operation

13. Extensive winching will run down the battery on the winching vehicle. Let the winching vehicle's engine run while operating the winch to prevent the battery from running low if winching for long periods.
14. The winch motor may become hot during winch use. If you winch for more than 45 seconds, or if the winch stalls during operation, stop winching and permit the winch to cool down for 10 minutes before using it again.
15. After winching is complete, especially if winching at an angle, it may be necessary to re-distribute the winch cable across the winch drum. You will need an assistant to perform this task.
    A. Release the clutch on the winch.
    B. Feed out the winch cable that is unevenly bunched up in one area.
    C. Re-engage the winch clutch.
    D. Have an assistant pull the winch cable tightly with about 100 lbs. (45 kg) of tension using the hook strap.
    E. Slowly winch the cable in while your assistant moves the end of the winch cable back and forth horizontally to evenly distribute the winch cable on the drum.
    F. Doing this reduces the chances of the winch cable "wedging" itself between lower layers of winch cable.

Winch Cable Care

For your safety, always replace POLARIS winch parts (including the cable) with genuine POLARIS replacement parts available at your authorized POLARIS dealer.

WARNING! Use of worn or damaged cable could lead to sudden failure and SEVERE INJURY.

1. Always inspect your winch before each use. Inspect for worn or loose parts including mounting hardware. Never use the winch if any part needs repair or replacement.
2. Always inspect your winch cable before each use. Inspect for worn or kinked winch cable.
   A. A kinked winch cable made of wire rope is shown at right. Even after being "straightened out," this cable has already been permanently and severely damaged. Promptly discontinue use of a winch cable in this condition.



   B. A kinked winch cable made of wire rope that has been "straightened out" is shown at right. Even though it may look usable, the cable has been permanently and severely damaged. It can no longer transmit the load that it could prior to kinking. Promptly discontinue use of a winch cable in this condition.



   C. A winch cable made of synthetic rope should be inspected for signs of fraying. Replace the cable if fraying is observed (shown at right). Promptly discontinue use of a winch cable in this condition.

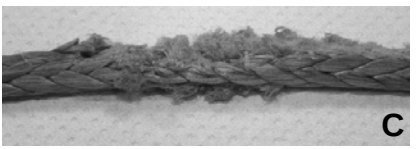

   D. Also replace the winch cable if there are fused or melted fibers. Such an area of the synthetic rope will be stiff and appear smooth or glazed. Promptly discontinue use of a winch cable in this condition.

WINCH GUIDE
Shock Loading

WARNING! Your winch cable is very strong but it is NOT designed for dynamic, or “shock” loading. Shock loading may tension a winch cable beyond its strength and cause the cable to break. The end of a broken winch cable under such high loading can cause SEVERE INJURY or DEATH to you and other bystanders.

Winch cables are designed to NOT absorb energy. This is true of both wire-rope and synthetic-rope winch cables.

1. Never attempt to “jerk” a load with the winch. For example, never take up slack in the winch cable by moving the winching vehicle in an attempt to move an object. This is a dangerous practice. It generates high winch cable loads that may exceed the strength of the cable. Even a slowly moving vehicle can create large shock loads in a winch cable.

WARNING! SEVERE INJURY or DEATH can result from a broken winch cable.

2. Never quickly turn the winch ON and OFF repeatedly (“jogging”). This puts extra load on the winch, winch cable, and generates excessive heat from the motor. This is a form of shock loading.
3. Never tow a vehicle or other object with your winch. Towing an object with a winch produces shock loading of the cable even when towing at slow speeds. Towing from a winch also positions the towing force high on the vehicle. This can cause instability of the vehicle and possibly lead to an accident.

Shock Loading

4. Never use recovery straps with your winch. Recovery straps are designed to stretch and can store energy. This stored energy in the recovery strap is released if a winch cable fails making the event even more hazardous. Similarly, never use elastic “bungie” cords for winching.
5. Never use the winch to tie down a vehicle to a trailer or other transportation vehicle. This type of use also causes shock loading that can cause damage to the winch, winch cable, or vehicles used.

Your winch cable is designed and tested to withstand the loads produced by the winch motor when operated from a stationary vehicle. Always remember that the winch and winch cable are NOT designed for shock loading.

WINCH GUIDE
Winch Maintenance and Service Safety

WARNING! Improper or lack of winch maintenance and service could lead to SEVERE INJURY or DEATH. Always follow all winch instructions and warnings in this manual.

1. Always inspect your winch before each use. Inspect for worn or kinked winch cable. Also inspect for worn or loose parts including mounting hardware.
2. Permit your winch motor to cool down prior to servicing your winch.
3. Never work on your winch without first disconnecting the battery connections to prevent accidental activation of the winch.
4. For your safety, always replace POLARIS winch parts (including the cable) with genuine POLARIS replacement parts available at your authorized POLARIS dealer.
5. Some winch models use wire rope as the winch cable. Other winches use a specially designed synthetic rope as the winch cable.
6. Never replace a synthetic-rope winch cable with a consumer-grade polymer rope such as can be purchased in a hardware store. Although they may look similar, they are NOT alike. A polymer rope not designed for winch use will stretch and store excessive energy when winching.

WARNING! Failure of a stretched rope under winching conditions will release all of the stored energy. This will increase the chances of SEVERE INJURY or DEATH.

Noise Emission Control System

Do not modify the engine, intake or exhaust components, as doing so may affect compliance with U.S.A. EPA noise control requirements (40 CFR 205) and local noise level requirements.

Operation on Public Lands in the U.S.A.

Your POLARIS vehicle has a spark arrester that was tested and qualified to be in accordance with the USFS standard 5100-1c. Federal law requires that this spark arrester be installed and functional when the vehicle is operated on public lands.

Operation of off-road vehicles on public lands in the U.S.A. is regulated by 43 CFR 420. Violations are subject to monetary penalties. Federal regulations can be viewed online at www.gpoaccess.gov/ecfr/.

Crankcase Emission Control System

This engine is equipped with a closed crankcase system. Blow-by gases are forced back to the combustion chamber by the intake system. All exhaust gases exit through the exhaust system.

Exhaust Emission Control System

Exhaust emissions are controlled by engine design. An electronic fuel injection (EFI) system controls fuel delivery. The engine and EFI components are set at the factory for optimal performance and are not adjustable.

The emissions label is located on the right front frame of the vehicle.

Electromagnetic Interference

This spark ignition system complies with Canadian standard ICES-002.

This vehicle complies with the EMC requirements of European directives 97/24/EC and 2004/108/EC.

Non-ionizing Radiation: This vehicle emits some electromagnetic energy. People with active or non-active implantable medical devices (such as heart monitoring or controlling devices) should review the limitations of their device and the applicable electromagnetic standards and directives that apply to this vehicle.

MAINTENANCE
Periodic Maintenance Chart

Any qualified repair shop or person may maintain, replace or repair the emission control devices or systems on your vehicle. An authorized POLARIS dealer can perform any service that may be necessary for your vehicle. POLARIS also recommends POLARIS parts for emissions-related service, however equivalent parts can be used.

It is a potential violation of the Clean Air Act if a part supplied by an aftermarket parts manufacturer reduces the effectiveness of the vehicle's emission controls. Tampering with emission controls is prohibited by federal law.

Owners are responsible for performing the scheduled maintenance identified in this owner's manual.

Careful periodic maintenance will help keep your vehicle in safe, reliable condition. Inspect, clean, lubricate, adjust and replace parts as necessary. When inspection reveals the need for replacement parts, genuine POLARIS parts are available from your POLARIS dealer. Equivalent parts may be used for emissions-related service.

Service and adjustments are important for proper vehicle operation. If you're not familiar with safe service and adjustment procedures, a qualified dealer can perform these operations.

Maintenance intervals in the following chart are based upon average riding conditions and an average vehicle speed of approximately 10 miles per hour. Vehicles subjected to severe use must be inspected and serviced more frequently.

Severe Use Definition

- Frequent immersion in mud, water or sand
- Racing or race-style high RPM use
- Prolonged low speed, heavy load operation
- Extended idle
- Short trip cold weather operation

Pay special attention to the oil level. A rise in oil level during cold weather can indicate contaminants collecting in the oil sump or crankcase. Change oil immediately if the oil level begins to rise. Monitor the oil level, and if it continues to rise, discontinue use and determine the cause. Your POLARIS dealer can assist.

Periodic Maintenance Chart

Maintenance Chart Key

Symbol	Description
►	Perform these operations more often for vehicles subjected to severe use.
D	Have an authorized POLARIS dealer or other qualified person perform these services.

WARNING! Improperly performing the procedures marked with a **"D"** could result in component failure and lead to serious injury or death. Have an authorized POLARIS dealer or other qualified person perform these services.

Perform all services at whichever maintenance interval is reached first. Record maintenance and service in the Maintenance Log beginning on page 160.

Item		Maintenance Interval (whichever comes first)			Remarks
		Hours	Calendar	Miles (Km)	
	Steering	-	Pre-Ride	-	Make adjustments as needed. See Pre-Ride Checklist on page 58.
	Front suspension	-		-	
	Rear suspension	-		-	
	Tires	-		-	
	Brake fluid level	-		-	
	Brake lever travel	-		-	
	Brake system	-		-	
	Wheels/fasteners	-		-	
	Frame fasteners	-		-	
	Engine oil level	-		-	
	Winch (if equipped)	-		-	See pages 79-90
►	Air filter, pre-filter	-	Daily	-	Inspect; clean often; replace as needed
	Coolant	-	Daily	-	Check level
►	Power steering unit	-	Daily	-	Inspect daily; clean often
	Headlight/taillight	-	Daily	-	Check operation

MAINTENANCE
Periodic Maintenance Chart

	Item	Maintenance Interval (whichever comes first)			Remarks
		Hours	Calendar	Miles (Km)	
►	Air filter, main element	-	Weekly	-	Inspect; replace as needed
► D	Brake pad wear	10 H	Monthly	100 (160)	Inspect periodically
	Battery	20 H	Monthly	200 (320)	Check terminals; clean; test
	Fuel System	20 H	Monthly	-	Inspect; cycle key to pressurize fuel pump; check lines and fittings for leaks and abrasion
►	Engine oil change	25 H	1 M	-	Break-in oil and filter change (see page 56)
►	Demand drive fluid (extreme use)	25 H	1 M	250 (400)	Change fluid every 25 hours if ADC is subjected to extreme use. See page 102.
►	Demand drive fluid	25 H	1 M	250 (400)	Break-in oil level check
►	Rear gearcase oil	25 H	1 M	250 (400)	Break-in oil level check
►	Transmission oil	25 H	1 M	250 (400)	Break-in oil level check
►	General lubrication	50 H	3 M	500 (800)	Lubricate all fittings, pivots, cables, etc.
	Shift linkage	50 H	6 M	500 (800)	Inspect, lubricate
D	Steering	50 H	6 M	500 (800)	Lubricate
►	Front suspension	50 H	6 M	500 (800)	Lubricate
►	Rear suspension	50 H	6 M	500 (800)	Lubricate
D	Throttle Cable/ Throttle Release Switch	50 H	6 M	500 (800)	Inspect; adjust; lubricate; replace if necessary
	Throttle Body Intake Duct	50 H	6 M	500 (800)	Inspect duct for proper sealing/air leaks
	Drive belt	50 H	6 M	500 (800)	Inspect; adjust; replace as needed
	Cooling system	50 H	6 M	1000 (1600)	Inspect coolant strength seasonally; pressure test system yearly
►	Radiator	50 H	6 M	1000 (1600)	Inspect; clean external surfaces
►	Cooling hoses	50 H	6 M	1000 (1600)	Inspect for leaks

► Perform these procedures more often for vehicles subjected to severe use.
D Have an authorized POLARIS dealer or other qualified person perform these services.

Periodic Maintenance Chart

Item		Maintenance Interval (whichever comes first)			Remarks
		Hours	Calendar	Miles (Km)	
►	Oil lines and fasteners	100 H	6 M	1000 (1600)	Inspect for leaks and loose fittings
►	Engine oil change	100 H	6 M	1000 (1600)	Change the oil and filter
►	Demand drive fluid (normal use)	100 H	12 M	1000 (1600)	Change fluid
►	Rear gearcase oil	100 H	12 M	1000 (1600)	Change fluid
►	Transmission oil	100 H	12 M	1000 (1600)	Change fluid
D	Fuel system	100 H	12 M	1000 (1600)	Cycle key to pressurize fuel pump; check for leaks at fill cap, fuel lines/rail and fuel pump; replace lines every two years
►	Engine mounts	100 H	12 M	1000 (1600)	Inspect
	Exhaust muffler/ pipe	100 H	12 M	1000 (1600)	Inspect
D	Spark plug	100 H	12 M	1000 (1600)	Inspect; replace as needed
►	Wiring	100 H	12 M	1000 (1600)	Inspect for wear, routing, security; apply dielectric grease to connectors subjected to water, mud, etc.
D	Clutches (drive and driven)	100 H	12 M	1000 (1600)	Inspect; clean; replace worn parts
D	Front wheel bearings	100 H	12 M	1000 (1600)	Inspect; replace as needed
D	Brake fluid	200 H	24 M	2000 (3200)	Change every two years
	Suspension bushings	250 H	24 M	2000 (3200)	Inspect; replace if necessary
	Spark arrester	300 H	36 M	3000 (4800)	Clean out
►	Coolant	-	60 M	-	Replace coolant
D	Valve clearance	1000 H	-	10000 (16000)	Inspect; adjust
D	Toe adjustment	-			Inspect periodically; adjust when parts are replaced
	Headlight aim	-			Adjust as needed

MAINTENANCE
Lubrication Guide

Check and lubricate all components at the intervals outlined in the Periodic Maintenance Chart beginning on page 92. Items not listed in the chart should be lubricated at the General Lubrication interval.

The a-arms and upper control arms are lubricated at the factory, and no additional lubrication will be needed. However, if these components are subjected to severe use, grease zerks have been provided for additional lubrication at the user's discretion.

Item	Recommended Lubricant	Capacity at Fluid Change	Fill Plug Torque	Drain Plug Torque	See Page
Engine Oil	PS-4 5W-50 4-Cycle Oil	2 qt. (1.9 l)	---	12 ft-lbs (16 Nm)	97
Transmission Oil	AGL Gearcase Lubricant & Transmission Fluid	37 oz. (1100 ml)	10-14 ft-lbs (14-19 Nm)	10-14 ft-lbs (14-19 Nm)	100
Demand Drive Fluid (Front Gearcase)	Demand Drive Fluid	9.3 oz. (275 ml)	8-10 ft-lbs (11-14 Nm)	11 ft-lbs (15 Nm)	102
Rear Gearcase Oil	ATV Angle Drive Fluid (or GL5 80-90 weight gear lube)	7.1 oz. (210 ml)	10-14 ft-lbs (14-19 Nm)	10-14 ft-lbs (14-19 Nm)	103
Brake Fluid	DOT 4 Brake Fluid	---	---	---	34
Front Prop Shaft Yoke	U-Joint Grease	Grease fittings (3 pumps maximum) every 500 miles, before long periods of storage, or after pressure washing or submerging.			
A-Arms, Front and Rear	POLARIS All-Season Grease	Grease fittings after extreme use or if suspension becomes squeaky.			

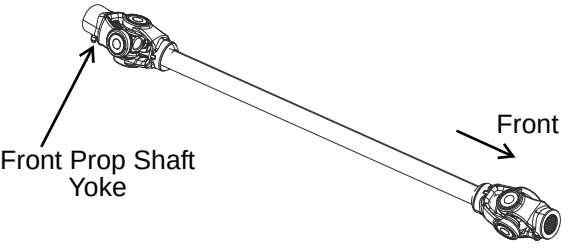

Engine Oil

Oil Recommendations

POLARIS recommends the use of POLARIS PS-4 Full Synthetic 5W-50 4-cycle oil or a similar oil for this engine. Oil may need to be changed more frequently if POLARIS oil is not used. Always use 5W-50 oil. Follow the manufacturer's recommendations for ambient temperature operation. See page 143 for the part numbers of POLARIS products.

See the table on page 96 for fluid recommendations, capacities and plug torques.

NOTICE: Mixing brands or using a non-recommended oil may cause serious engine damage. Always use the recommended oil. Never substitute or mix oil brands.

Oil Level

Check the oil level when the engine is cold. *Never check the oil with the engine running.*

1. Position the vehicle on a level surface.
2. Access the oil dipstick and fill tube from the left side of the ATV. Remove the dipstick. Wipe it dry with a clean cloth.
3. Reinstall and tighten the dipstick.
4. Remove the dipstick and check the oil level.
5. Add the recommended fluid as needed. Maintain the oil level in the safe range between the FULL and ADD marks. Do not overfill.
6. Reinstall and tighten the dipstick.

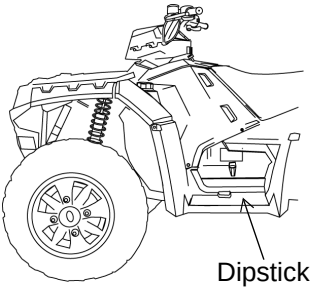

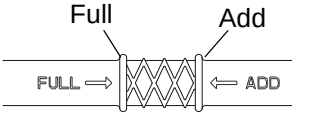



MAINTENANCE
Engine Oil
Oil and Filter Change

See the table on page 96 for fluid recommendations, capacities and plug torques. Always change the oil and filter at the intervals outlined in the Periodic Maintenance Chart beginning on page 92. Always change the oil filter whenever changing oil.

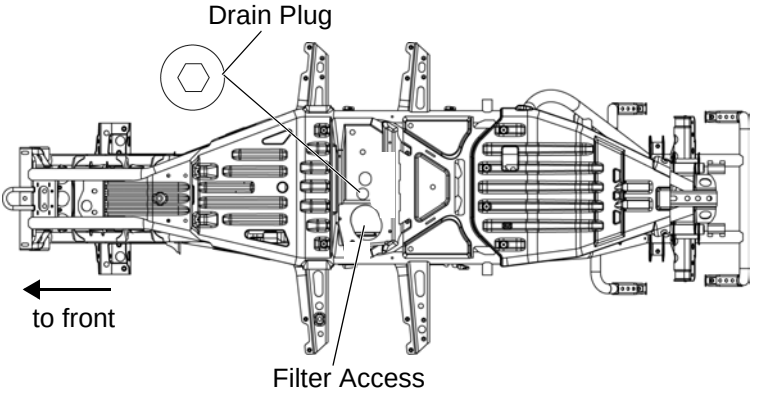

1. Position the vehicle on a level surface.
2. Start the engine. Allow it to warm up at idle for two to three minutes.
3. Stop the engine.
4. Clean the area around the drain plug.
5. Place a drain pan under the crankcase.
6. Remove the drain plug. Allow the oil to drain completely.

CAUTION! Hot oil can cause burns to skin. Do not allow hot oil to contact skin.

7. Install a new sealing washer on the drain plug. The sealing surfaces on drain plug and crankcase should be clean and free of burrs, nicks or scratches.
8. Reinstall the drain plug. Torque to specification.

Engine Oil

Oil and Filter Change

9. Place shop towels beneath the oil filter. Using an oil filter wrench (available from your POLARIS dealer), turn the filter counter-clockwise to remove it.
10. Using a clean dry cloth, clean the filter sealing surface on the crankcase.
11. Lubricate the o-ring on the new filter with a film of fresh engine oil. Check to make sure the o-ring is in good condition.
12. Install the new filter and rotate it clockwise by hand until the filter gasket contacts the sealing surface, then turn it an additional 3/4 turn.

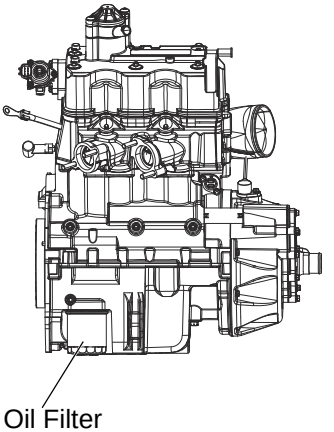

13. Remove the dipstick. Add the proper amount of the recommended oil. Do not overfill.
14. Reinstall the dipstick.
15. Place the transmission in PARK.
16. Lock the parking brake.
17. Start the engine. Allow it to idle for one to two minutes.
18. Stop the engine.
19. Check for leaks.
20. Check the oil level. Add oil as needed to bring the level to the upper mark on the dipstick.
21. Dispose of used filter and oil properly.

MAINTENANCE
Transmission Oil

Always check and change the transmission oil at the intervals outlined in the Periodic Maintenance Chart beginning on page 92. See the table on page 96 for fluid recommendations, capacities and plug torques. See page 143 for the part numbers of POLARIS products.

Maintain the oil level at the bottom of the fill plug hole. The fill plug is located on the right side of the ATV behind the footwell. The drain plug is located on the bottom rear side of the gearcase.

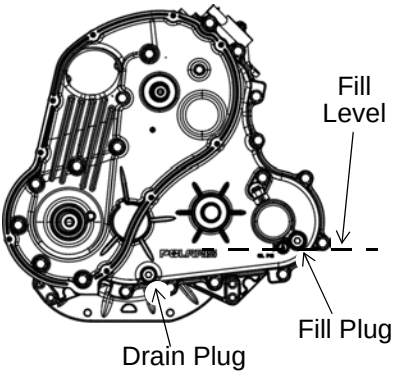

Oil Check

1. Remove the footwell (see page 109).
2. Remove the fill plug. Check the oil level.
3. Add the recommended fluid as needed to bring the level to the bottom of the fill hole threads.
4. Reinstall the fill plug. Torque to specification.
5. Reinstall the footwell.

Transmission Oil

Oil Change

1. Remove the footwell.
2. Place a drain pan under the gearcase. Remove the drain plug. Allow the oil to drain completely.
3. Clean and reinstall the drain plug. Torque to specification.
4. Remove the fill plug. Add the proper amount of the recommended oil.
5. Reinstall the fill plug. Torque to specification.
6. Check for leaks.
7. Reinstall the footwell.
8. Dispose of used oil properly.

MAINTENANCE
Front Gearcase (Demand Drive) Fluid

Always check and change the demand drive fluid at the intervals outlined in the Periodic Maintenance Chart beginning on page 92. See the table on page 96 for fluid recommendations, capacities and plug torques. See page 143 for the part numbers of POLARIS products.

Change the front gearcase fluid every 25 hours if the ADC unit is exposed to extreme use. Extreme use includes any of the following:

- operation in ADC mode for prolonged periods
- constant ADC operation on hilly or mountainous terrain
- ADC is the primary mode of all-wheel-drive operation

Tip: If the front gearcase is makes excessive noise during ADC operation, change the demand drive fluid. If the noise continues, please see your POLARIS dealer or other qualified service facility for service.

Use the recommended fluid. Use of other fluids may result in improper operation of components. Maintain the fluid level at the bottom of the fill hole threads. The fill plug is located on the right side of the demand drive unit. The drain plug is located on the bottom right side of the unit.

Fluid Check

1. Position the vehicle on a level surface. Remove the fill plug. Check the fluid level.
2. Add the recommended fluid as needed to bring the level to the bottom of the fill hole threads.
3. Reinstall the fill plug. Torque to specification.

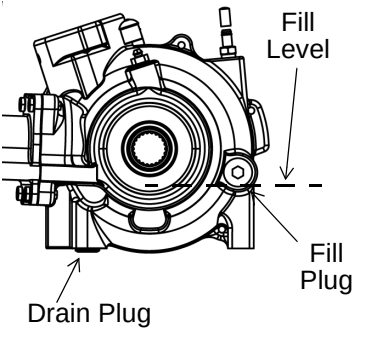

Fluid Change

1. Position the vehicle on a level surface. Remove the fill plug.
2. Place a drain pan under the demand drive unit. Remove the drain plug. Allow the fluid to drain completely.
3. Clean and reinstall the drain plug. Torque to specification.
4. Add the proper amount of the recommended fluid.
5. Reinstall the fill plug. Torque to specification.
6. Check for leaks. Dispose of used fluid properly.

Rear Gearcase Oil

Always check and change the rear gearcase oil at the intervals outlined in the Periodic Maintenance Chart beginning on page 92. See the table on page 96 for fluid recommendations, capacities and plug torques. See page 143 for the part numbers of POLARIS products.

The fill plug is located on the rear of the gearcase. The drain plug is located on the bottom of the gearcase.

Maintain the fluid level at the bottom of the fill hole threads. Do not overfill.

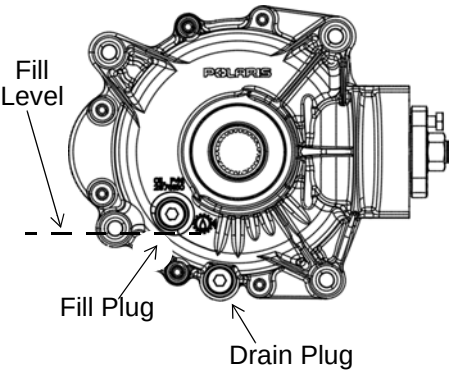

Oil Check

1. Position the vehicle on a level surface.
2. Remove the fill plug. Check the oil level.
3. Add the recommended oil as needed to bring the level to the bottom of the fill hole threads. *Do not overfill.*
4. Reinstall the fill plug. Torque to specification.

Oil Change

1. Position the vehicle on a level surface.
2. Place a drain pan under the drain hole.
3. Remove the drain plug. Allow the oil to drain completely.
4. Clean and reinstall the drain plug with a new sealing washer. Torque to specification.
5. Remove the fill plug. Add the proper amount of the recommended oil. *Do not overfill.*
6. Reinstall the fill plug. Torque to specification.
7. Check for leaks.
8. Dispose of used oil properly.

MAINTENANCE

Power Steering Unit

If your model is equipped with power steering, frequently clean the areas around and on the power steering unit to allow proper cooling. Clean these areas thoroughly.

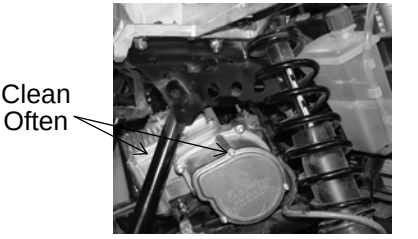

Steering Assembly

The steering assembly of the ATV should be checked periodically for loose nuts and bolts. If loose nuts and bolts are found, see your POLARIS dealer or other qualified service facility before operating the vehicle.

Cooling System

The engine coolant level is controlled, or maintained, by the recovery system. The recovery system components are the recovery bottle, the radiator filler neck, the radiator pressure cap and the connecting hose.

As coolant operating temperature increases, the expanding (heated) excess coolant is forced out of the engine, past the pressure cap, and into the recovery bottle. As engine coolant temperature decreases the contracting (cooled) coolant is drawn back up from the bottle, past the pressure cap, and into the radiator.

Some coolant level drop on new vehicles is normal as the system is purging itself of trapped air. Check the coolant level and maintain as recommended by adding coolant to the recovery bottle.

POLARIS recommends the use of POLARIS Antifreeze 50/50 Premix. This antifreeze is already premixed and ready to use. Do not dilute with water. See page 143 for the part numbers of POLARIS products.

Cooling System

Recovery Bottle Coolant

The recovery bottle fluid level can be viewed from inside the front right wheel well. Open or remove the front rack/box to access the fill cap. See pages 38-39. If your model is not equipped with a front rack/box, access the fill cap through the wheel well.

1. View the fluid level in the bottle.
2. If the level is low, remove the bottle cap and add coolant as needed. Maintain the coolant level between the minimum and maximum marks on the bottle (when the fluid is cool).
3. Reinstall the cap.



Recovery Bottle Cap

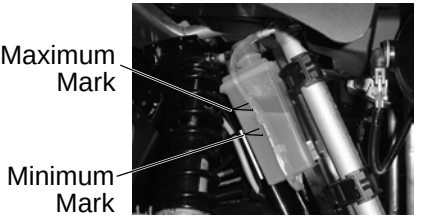

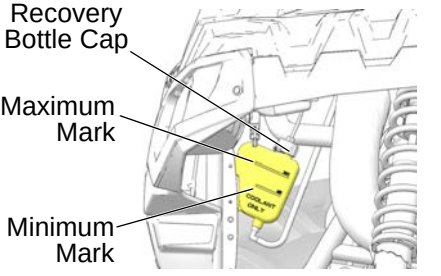

High Lifter Models

MAINTENANCE
Cooling System
Radiator Coolant

To ensure that the coolant maintains its ability to protect the engine, we recommend that the system be completely drained every five (5) years and fresh Antifreeze 50/50 Premix added.

Any time the cooling system has been drained for maintenance or repair, replace the coolant with fresh Antifreeze 50/50 Premix. If the recovery bottle has run dry, check the level in the radiator. Add coolant as needed.

CAUTION! Escaping steam can cause burns. Never remove the pressure cap while the engine is warm or hot. Always allow the engine to cool before removing the pressure cap.

1. Open or remove the front rack/box to access the pressure cap. See pages 38-39. If your model is not equipped with a front rack/box, access the cap under the front cover.
2. Remove the pressure cap.
3. Using a funnel, slowly add coolant through the radiator filler neck.
4. Reinstall the pressure cap. Use of a non-standard pressure cap will not allow the recovery system to function properly. Your POLARIS dealer can provide the correct replacement part.



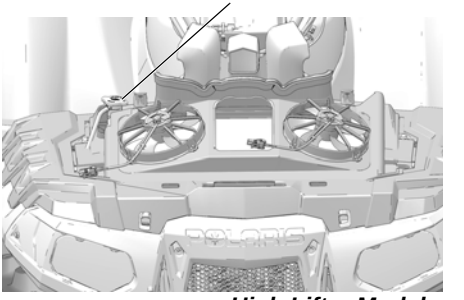

High Lifter Models

Brakes

Hand Brake

The front and rear brakes are hydraulic disc brakes, activated by moving the single brake lever toward the handlebar. These brakes are self-adjusting.

Under normal operation, the diaphragm extends into the reservoir as fluid level drops. If the fluid level is low and the diaphragm is not extended, a leak is likely and the diaphragm should be replaced. To ensure proper diaphragm operation, always fill the reservoir as needed whenever the cover is loosened or removed. Do not overfill.

WARNING! An over-full master cylinder may cause brake drag or brake lock-up, which could result in serious injury or death. Maintain brake fluid at the recommended level. Do not overfill.

The following checks are recommended to keep the brake system in good operating condition. Check more often if brakes are used heavily under normal operation.

1. Always keep brake fluid at an adequate level. See page 34.
2. Check the brake system for fluid leaks.
3. Check the brakes for excessive travel or spongy feel.
4. Check the friction pads for wear, damage and looseness. Replace brake pads when they are worn to .030” (0.762 mm).
5. Check the security and surface condition of the disc. Clean any grease using a recommended brake cleaner or alcohol. Do not use spray lubricants or other petroleum-based products. If you discover any damage (cracks, excessive corrosion, warping) see your dealer for service before operating.

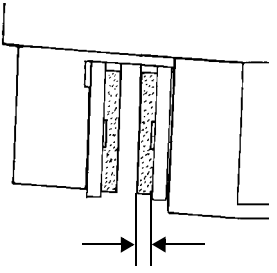

.030” (0.762 mm)

Auxiliary Foot Brake

The hydraulic auxiliary brake system requires no adjustment. Check the brake fluid level frequently for the auxiliary brake system. See page 36.

MAINTENANCE
Toe Alignment

Use the following procedure to check the toe alignment of the vehicle. The recommended toe alignment is 1/4-1/2 inch (6-12 mm).

WARNING! Severe injury or death can result from improper toe alignment and adjustment. Do not attempt to adjust tie rod alignment. All tie rod adjustments should be performed by an authorized POLARIS dealer or other qualified service facility.

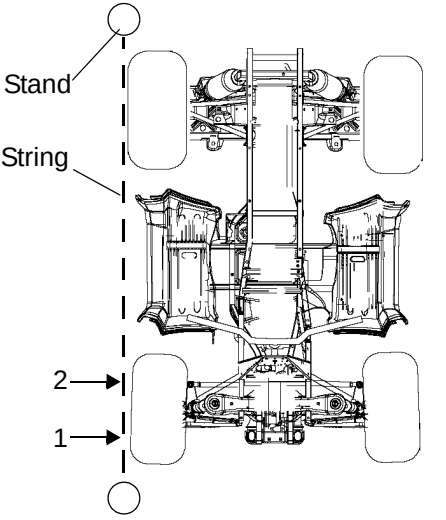

1. Position the vehicle on a level surface.
2. Place the handlebars in a straight-ahead position.
3. Tie a length of string between two stands as shown in the illustration. Position the stands so that the string is flush with the side of the rear tire. If available, you may use a long straight-edge instead of string.
4. Measure the distance from the string to the rim at the front (1) and rear (2) of the front rim. The rear measurement should be 1/8-1/4 inch (3-6 mm) more than the front measurement on each side of the vehicle to obtain the recommended 1/4-1/2 inch (6-12 mm) toe out alignment.
5. Repeat the measurement procedure on the other side of the vehicle.
6. If you discover improper alignment, see your POLARIS dealer for service.

Side Panel/Footwell Removal

1. Remove the seat before removing a side panel.
2. To remove a side panel or footwell, remove the fasteners securing it to the frame. Lift the right side panel upward while removing it to clear the shifter knob

Touring Shown

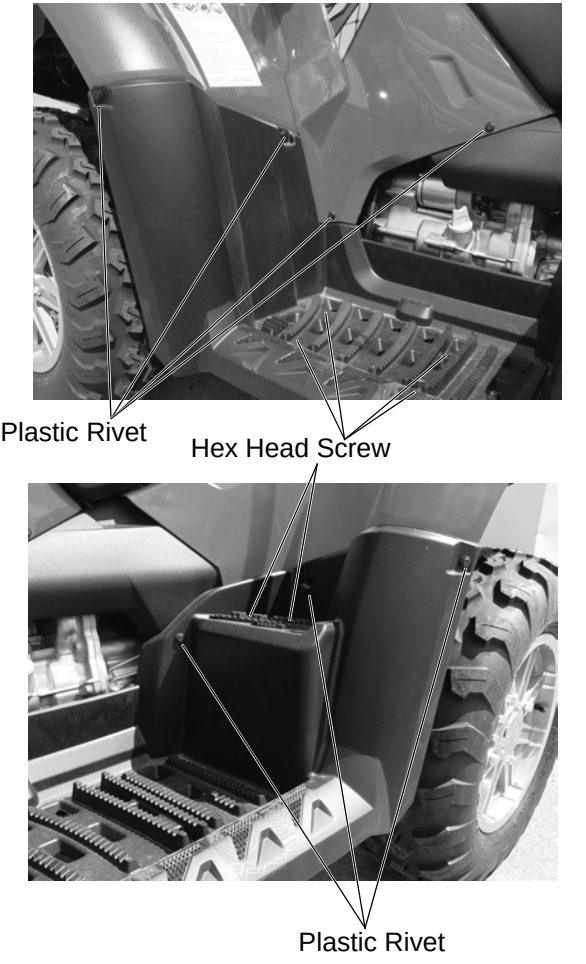

MAINTENANCE

Seat Removal (1-Up Models)

1. Grasp one side of the seat near the rear edge.
2. Pull upward abruptly to disengage the under-seat fasteners.
3. Remove the seat.

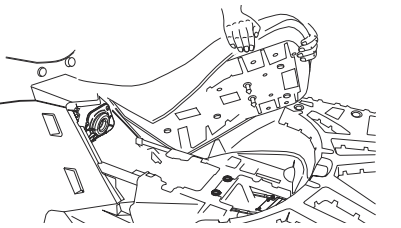

Seat Removal (Touring)

To remove the operator's seat, grasp one side of the seat near the rear edge. Pull upward abruptly to disengage the under-seat fasteners.

To remove the passenger seat, pull the top of the seatback slightly rearward to relieve tension (1) while pulling the seat release latch upward (2). When the latch releases, roll the seat assembly forward (3) and lift the seat away from the vehicle.

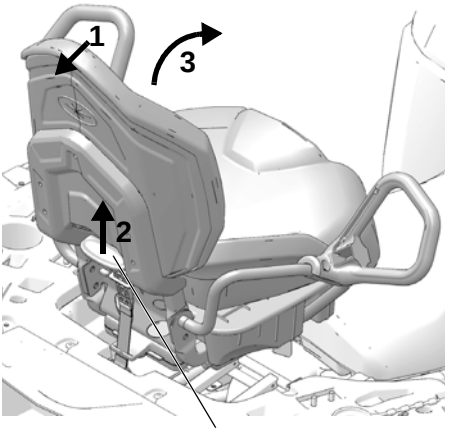

Tires

⚠ WARNING

Operating your ATV with worn tires, improperly inflated tires, non-standard tires or improperly installed tires will affect vehicle handling and could cause an accident resulting in serious injury or death. Always follow all tire maintenance procedures as outlined in this manual and on the labels on the vehicle. Always use original equipment size and type when replacing tires.

Refer to the specifications section beginning on page 146 for recommended tire type, size and pressure.

Tire Tread Depth

Always replace tires when tread depth is worn to 1/8” (3 mm) or less.

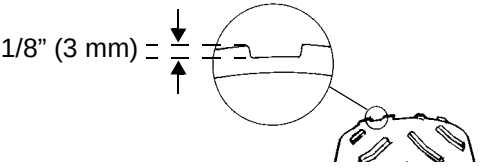

Front Wheel Hub Tightening

Front wheel bearing tightness and spindle nut retention are critical component operations. All service must be performed by your authorized POLARIS dealer or other qualified service facility.

Wheel Removal

1. Stop the engine.
2. Place the transmission in PARK.
3. Lock the parking brake.
4. Loosen the wheel nuts slightly.

WARNING! Do not service axle nuts that have a cotter pin installed. Your POLARIS dealer can assist.

5. Elevate the side of the vehicle by placing a suitable stand under the footrest frame.
6. Remove the wheel nuts.
7. Remove the wheel.

MAINTENANCE
Tires
Wheel Installation

1. Place the transmission in PARK.
2. Lock the parking brake.
3. Place the wheel on the hub with the valve stem toward the outside and rotation arrows on the tire pointing toward forward rotation.
4. Install the wheel nuts and finger-tighten them.
5. Lower the vehicle to the ground.
6. Torque the wheel nuts to specification.

WARNING! Loose nuts could cause a tire to come off during operation, which could result in an accident or overturn. Always ensure that all nuts are torqued to specification.

Wheel Nut Torque Specifications

Check the wheel nut torques occasionally and when they've been loosened for service.

Wheel Type	Nut Torque
All	75 ft-lbs (102 Nm)

Air Filter

1. Remove the seat.
2. ***All Models Except High Lifter:*** Remove the air box cover strap and remove the cover.
   High Lifter Models: Use a T27 torx bit to remove the air box cover screw and remove the cover.
3. Remove the filter.
4. Remove the fabric type pre-filter from the main filter. Wash the pre-filter in soapy water, then rinse and let dry.
5. Reinstall the pre-filter over the main filter. Install a new main filter if needed.
6. Reinstall the filter.
7. Reinstall the air box cover.
8. ***High Lifter Models:*** Reinstall and tighten the cover screw until the cover is sealed.
9. Reinstall the seat.

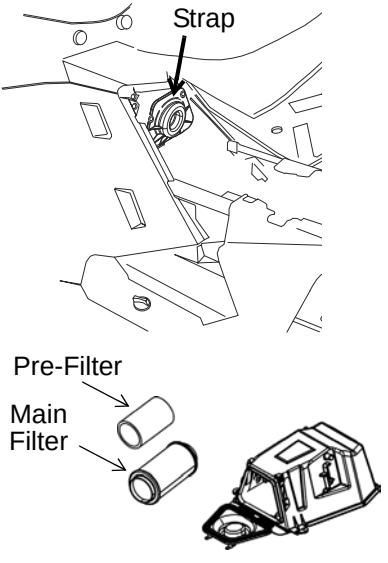

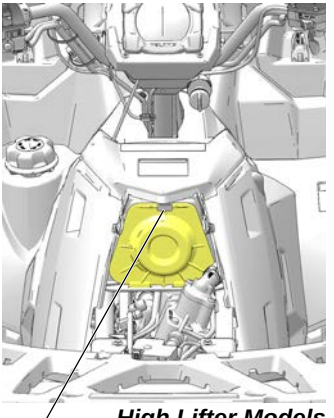

High Lifter Models

MAINTENANCE
Fuse Replacement

If the engine stops or will not start, or if you experience other electrical failures, a fuse may need replacement. Locate and correct any short circuits that may have caused the blown fuse, then replace the fuse. Spare fuses are provided in the fuse box.

1. Open or remove the front rack, box or fan shroud to access the fuse box. See pages 38-39.
2. Remove the fuse box cover.
3. Remove the suspect fuse from the fuse panel. If the fuse is blown, install a new fuse with the same amperage rating.
4. Reinstall the fuse box cover.
5. Close and secure the front rack, box or fan shroud and cover.

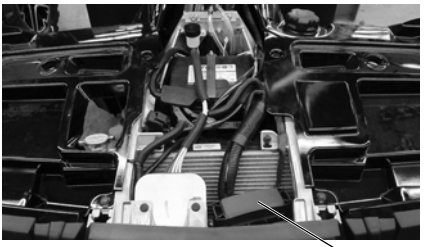

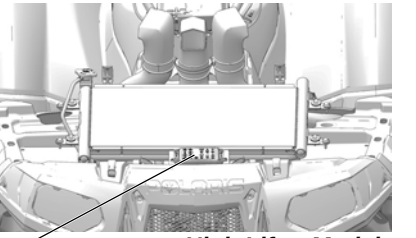

High Lifter Models

Fuse Box

Lights

Poor lighting can result in reduced visibility when driving. Headlight and taillight lenses become dirty during normal operation. Clean headlights frequently and replace burned out headlamps promptly. Always make sure lights are adjusted properly for best visibility.

Headlight Lamp Replacement

When servicing a halogen lamp, avoid touching the lamp with bare fingers. Oil from your skin leaves a residue, causing a hot spot that will shorten the life of the lamp. If fingers do touch a lamp, clean it with denatured alcohol.

1. ***SP/XP Models:***
   Remove the seven (7) headlight pod screws. Pull the pod cover forward.

   Non-SP/XP:
   Remove the five (5) headlight pod screws. Lift the pod cover and disconnect the speedometer harnesses from the speedometer.

CAUTION! Hot components can cause burns to skin. Allow lamps to cool before servicing.

2. Unplug the headlamp from the wiring harness. Be sure to pull on the connector, not on the wiring.
3. Turn the lamp counter-clockwise to remove it.
4. Install the new lamp. Make sure the tab on the lamp locates properly in the housing.
5. Reassemble the pod.

MAINTENANCE
Lights
High Beam Adjustment (Headlight Pod)

The headlight beam can be adjusted slightly upward or downward. Use the following procedure to make the adjustment.

1. Position the vehicle on a level surface with the headlight approximately 25 ft. (7.6 m) from a wall. Place the transmission in PARK.

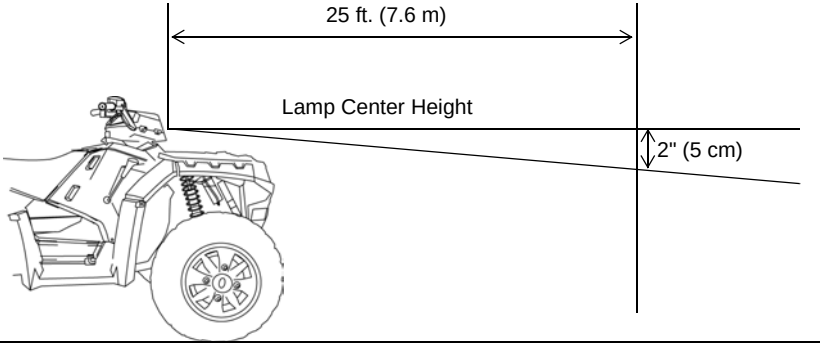

2. Measure the distance from the floor to the center of the headlight and make a mark on the wall at the same height.
3. Start the engine. Turn the headlight switch to high beam.
4. Observe the headlight aim on the wall. The most intense part of the headlight beam should be two inches (5 cm) below the mark on the wall. Include rider weight on the seat when measuring.
5. The adjustment screw is located on the right side of the headlight pod. To adjust the beam, loosen the screw. Adjust the headlamp to the desired position, then tighten the screw.

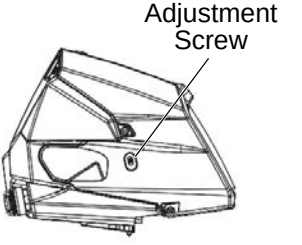

Lights

Low Beam Adjustment (Bumper)

The low beam can be adjusted slightly upward or downward.

1. Loosen the phillips screw located at the rear of the headlamp.
2. Tilt the headlamp upward or downward.
3. Tighten the screw.

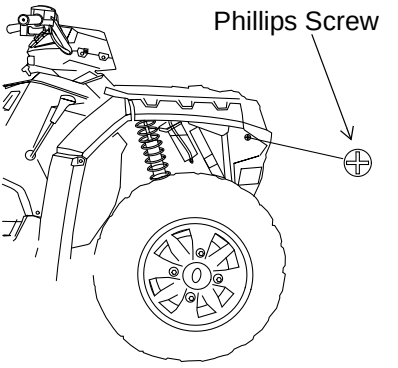

MAINTENANCE
Lights
Pod Headlight Housing Replacement (SP/XP Models)

1. Remove the seven (7) headlight pod screws.
2. Pull the pod cover forward.
3. Unplug the headlamp from the wiring harness.
4. Use a small screwdriver to remove the o-rings from the headlight mounting tabs.

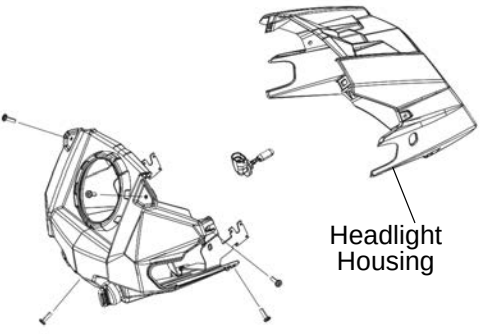

5. Pull the headlight housing up from the bracket for removal.
6. Reverse the steps to install the new housing and reassemble the pod.

Pod Headlight Housing Replacement (Non-SP/XP)

1. Remove the five (5) headlight pod screws.
2. Lift the pod cover and disconnect the speedometer harnesses from the speedometer.
3. Unplug the headlamp from the wiring harness.
4. Use a small screwdriver to remove the o-rings from the headlight mounting tabs.
5. Pull the headlight housing up to release it from the locking tabs.

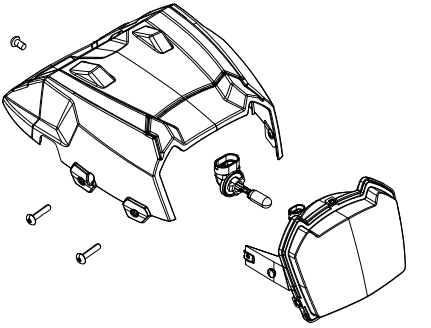

6. Carefully pull the assembly up and out of the pod.
7. Reverse the steps to install the new housing and reassemble the pod.

Lights

Lower Headlamp Replacement

1. Turn the back of the headlight harness counter-clockwise and pull the harness assembly away from the headlight assembly.
2. Remove the headlamp and install the new headlamp.
3. Reinstall the harness assembly into the headlight assembly.
4. Turn the headlight harness clockwise to secure the headlamp.

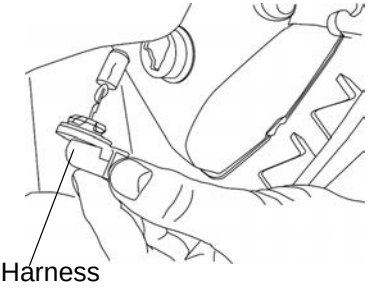

Taillight/Brakelight Lamp Replacement

1. Remove the harness connector from the back of the light assembly.
2. Turn the lamp counter-clockwise to remove it.
3. Install the new lamp.
4. Reinstall the harness connector.
5. Test the light for proper operation.

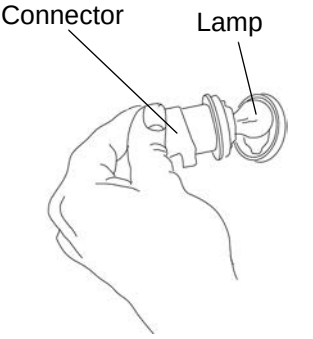

MAINTENANCE

Spark Plugs

Spark Plug Recommendations

Refer to the specifications section beginning on page 146 for the recommended spark plug type and gap for your vehicle. Torque spark plugs to specification.

NOTICE: Using non-recommended spark plugs can result in serious engine damage. Always use POLARIS-recommended spark plugs or their equivalent.

Plug Condition	Torque Specification
New Spark Plug	18-20 ft-lbs (24-27 Nm)
Previously Installed Spark Plug	18-20 ft-lbs (24-27 Nm)

Spark Plug Inspection

Spark plug condition is indicative of engine operation. Check the spark plug firing end condition after the engine has been warmed up and the vehicle has been driven at higher speeds. Immediately check the spark plug for correct color. See page 121.

CAUTION! A hot exhaust system and engine can cause burns. Wear protective gloves when removing a spark plug for inspection.

1. Rotate the spark plug cap 1/4 turn and pull it off the spark plug.
2. Rotate the spark plug counter-clockwise to remove it.
3. Reverse the procedure for spark plug installation. Torque to specification.

Spark Plugs

Spark Plug Inspection

Normal Spark Plug

The normal insulator tip is gray, tan or light brown. There will be few combustion deposits. The electrodes are not burned or eroded. This indicates the proper type and heat range for the engine and the service.

The tip should not be flaky and white. A white insulator tip indicates overheating, caused by use of an improper spark plug or incorrect fuel.

Wet Fouled Spark Plug

The wet fouled insulator tip is black. A damp oil film covers the firing end. There may be a carbon layer over the entire nose. Generally, the electrodes are not worn. General causes of fouling are excessive oil, use of non-recommended oil or incorrect throttle body adjustments.

MAINTENANCE
Vehicle Immersion

If your vehicle becomes immersed, major engine damage can result if the machine is not thoroughly inspected. Take the vehicle in for service before starting the engine. Your POLARIS dealer can provide this service.

1. Move the ATV to dry land or at the very least, to water below the footrests.
2. Check the air box. If water is present, dry the air box and replace the filter with a new filter. If equipped, remove the air box drain plug to drain water. Reinstall the drain plug. Make sure the E-ring is on the drain plug and reinstall the drain plug.

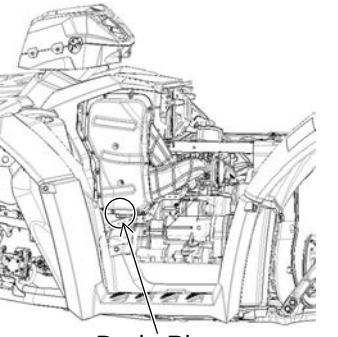

NOTICE: Serious damage could occur if the air box drain plug is not reinstalled and tightened properly.

3. Remove the spark plugs.
4. Turn the engine over several times using the electric start.
5. Dry the spark plugs. Reinstall the plugs or install new plugs.
6. Attempt to start the engine. If necessary, repeat the drying procedure.

NOTICE: Serious damage can occur after immersion if fluids are not changed promptly. Your POLARIS dealer can assist.

7. Take the vehicle in for service as soon as possible, whether you succeed in starting it or not. Your POLARIS dealer can provide the required service.
8. If water has been ingested into the PVT, follow the procedure on page 126 for drying out the PVT.

Spark Arrester

⚠ WARNING

Failure to heed the following warnings while servicing the spark arrester could result in serious injury or death. Never run the engine in an enclosed area. Remove any combustible materials from the area. Wear eye protection and leather work gloves. Do not stand behind or in front of the vehicle while purging. Never go under the vehicle while it's inclined.

The exhaust system can get extremely hot. Do not perform service on the spark arrester while the system is hot. Allow components to cool sufficiently before proceeding.

Use the following procedure to periodically purge accumulated carbon from the exhaust pipe/muffler.

1. Remove the arrester clean-out plug from the bottom of the muffler.
2. Place the transmission in PARK.
3. Start the engine.
4. Quickly squeeze and release the throttle lever several times to purge carbon from the system.
5. If carbon comes out of the exhaust, cover or plug the exhaust outlet(s). Wear protective gloves.

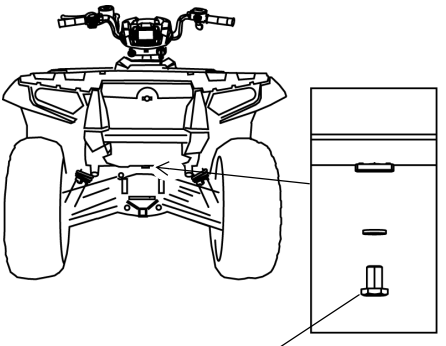

6. Lightly tap on the exhaust pipe with a rubber mallet while repeating step 4.
7. If particles are still suspected to be in the muffler, elevate the rear of the vehicle one foot (30 cm) higher than the front. Block the wheels.
8. Repeat steps 4 to 6 until no more particles are expelled.
9. Stop the engine. Allow the arrester to cool.
10. Reinstall the arrester plug and remove the exhaust outlet cover or plug.

MAINTENANCE
PVT System

⚠ WARNING

Failure to comply with the instructions in this warning can result in severe injury or death.

Do not modify any component of the PVT system. Doing so may reduce its strength so that a failure may occur at a high speed. The PVT system has been precision balanced. Any modification will cause the system to be out of balance, creating vibration and additional loads on components.

The PVT system rotates at high speeds, creating large amounts of force on clutch components. Extensive engineering and testing has been conducted to ensure the safety of this product. However, as the owner, you have the following responsibilities to make sure this system remains safe:

- Always follow all recommended maintenance procedures. Always look for and remove debris inside and around the clutch and vent system when replacing the belt.
- See your POLARIS dealer or other qualified person for service and repair assistance.
- This PVT system is intended for use on POLARIS products only. Do not install it in any other product.
- Always make sure the PVT housing is securely in place during operation.

PVT System

The basic operation of the POLARIS PVT system is dependent on engine speed and vehicle torque requirements. As engine speed increases, the force exerted on the movable drive sheave by the flyweights also increases. This, in turn, increases the amount of pinch applied to the drive belt. Similarly, if the engine speed decreases, the amount of centrifugal force decreases, reducing the amount of belt pinch.

On POLARIS ATVs, the approximate gear ratio difference between high and low range is 1:2.25. This difference in gearing affects the operation of the PVT, especially at speeds less than 7 MPH (11 km/h), due to the system's dependence on engine speed.

For example, when operating at a ground speed of 3 MPH (5 km/h) in low range, the engine speed would be around 3000 RPM. This is well above the engagement speed of 1600 - 1800 RPM. However, in high range at 3 MPH (5 km/h), the engine would be running at only 1500 RPM. Whenever operating this close to the engagement speed, the engine may be running at a speed too low to provide the pinch needed to prevent belt slip. Belt slip is responsible for creating the excessive heat that destroys belts, wears clutch components and causes outer clutch covers to fail.

The air temperature in the clutch cover is substantially reduced by using low range while operating at low ground speeds. Reducing the temperature inside the clutch cover greatly extends the life of the PVT components (belt, cover, etc.).

MAINTENANCE
PVT System
When To Use Low Range and High Range

Condition	Range to Use
Operating at speeds less than 7 MPH (11 km/h)	Low
Towing heavy loads	Low
Operating in rough terrain (swamps, mountains, etc.)	Low
Operating at speeds greater than 7 MPH (11 km/h)	High

PVT Drying

There may be some instances when water is accidently ingested into the PVT system. Use the following instructions to dry it out before operating.

1. Position the vehicle on a level surface.
2. Remove the drain plug. Allow the water to drain completely. Reinstall the drain plug.
3. Start the engine. Place the transmission in PARK.
4. Apply varying throttle for 10-15 seconds to expel the moisture and air-dry the belt and clutches. Do not hold the throttle wide open for more than 5 seconds.
5. Allow the engine RPM to settle to idle speed, then shift the transmission to low range.
6. Test for belt slippage. If the belt slips, repeat the process.
7. Your vehicle requires service as soon as possible, which your POLARIS dealer can provide.

Battery

⚠ WARNING

Improperly connecting or disconnecting battery cables can result in an explosion and cause serious injury or death. When removing the battery, always disconnect the negative (black) cable first. When reinstalling the battery, always connect the negative (black) cable last.

Your ATV is equipped with a sealed battery, which requires little maintenance. POLARIS does not recommend using a conventional battery in this vehicle. The orientation of the battery could result in electrolyte leakage, which would shorten the life of the battery considerably.

Always keep battery terminals and connections free of corrosion. If cleaning is necessary, remove corrosion with a stiff wire brush. Wash with a solution of one tablespoon baking soda and one cup water. Rinse well with tap water and dry off with clean shop towels. Coat the terminals with dielectric grease or petroleum jelly.

Battery Removal

1. Access the battery in the front compartment. See pages 38-39.
2. Disconnect the black (negative) battery cable first.
3. Disconnect the red (positive) battery cable last.
4. Disconnect the battery hold-down strap.
5. Lift the battery out of the ATV.

MAINTENANCE

Battery

Battery Installation

Using a new battery that has not been fully charged can damage the battery and result in a shorter life. It can also hinder vehicle performance. Follow the battery charging instructions on page 129 before installing the battery.

An optional extreme use battery may be available for your model. If the performance of the factory-installed battery is inadequate due to operation in extreme cold or due to extended use of multiple electrical accessories, your POLARIS dealer can assist. Your dealer can provide any installation procedures that may differ for an extreme use battery.

1. Ensure that the battery is fully charged.
2. Place the battery in the battery holder.
3. Coat the terminals with dielectric grease or petroleum jelly.
4. Secure the battery hold-down strap.
5. Connect and tighten the red (positive) cable first.
6. Connect and tighten the black (negative) cable last.
7. Verify that cables are properly routed. Cables should be safely tucked away at the front and rear of the battery.

Battery Storage

Whenever the vehicle is not used for a period of three months or more, remove the battery from the vehicle, ensure that it's fully charged, and store it out of the sun in a cool, dry place. Check battery voltage each month during storage and recharge as needed to maintain a full charge.

POLARIS recommends maintaining battery charge by using a POLARIS Battery Tender charger or by charging about once a month to make up for normal self-discharge. Battery Tender can be left connected during the storage period, and will automatically charge the battery if the voltage drops below a pre-determined point. See page 143 for the part numbers of POLARIS products.

Battery

Battery Charging

The following battery charging instructions apply only to the installation of a sealed battery. Read all instructions before proceeding with the installation of this battery.

The sealed battery is already filled with electrolyte and has been sealed and *fully charged* at the factory. *Never* pry the sealing strip off or add any other fluid to this battery.

The single most important thing about maintaining a sealed battery is to keep it fully charged. Since the battery is sealed and the sealing strip cannot be removed, you must use a voltmeter or multimeter to measure DC voltage.

WARNING! An overheated battery may explode, causing severe injury or death. Always watch charging times carefully. Stop charging if the battery becomes very warm to the touch. Allow it to cool before resuming charging.

For a refresh charge, follow all instructions carefully.

1. The battery should be disconnected from a load or charger for at least two hours before checking voltage. Check the battery voltage with a voltmeter or multimeter. A fully charged battery will register 12.8 V or higher.
2. If the voltage is less than 12.8 volts, recharge the battery at 1.2 amps or less until battery voltage is 12.8 or greater.
3. When using an automatic charger, refer to the charger manufacturer's instructions for recharging. When using a constant current charger, use the guidelines on the next page for recharging.

MAINTENANCE
Battery
Battery Charging (Sealed Battery)

Always verify battery condition before and 1-2 hours after the end of charging.

State of Charge	Voltage	Action	Charge Time (Using constant current charger @ standard amps specified on top of battery)
100%	12.8-13.0 volts	None, check at 3 mos. from date of manufacture	None required
75%-100%	12.5-12.8 volts	May need slight charge, if no charge given, check in 3 months	3-6 hours
50%-75%	12.0-12.5 volts	Needs charge	5-11 hours
25%-50%	11.5-12.0 volts	Needs charge	At least 13 hours, verify state of charge
0%-25%	11.5 volts or less	Needs charge with desulfating charger	At least 20 hours

Camber and Caster

The camber and caster are non-adjustable.

Rear Spring

The rear shock absorber spring is adjusted by rotating the adjuster either clockwise or counter-clockwise to increase or decrease spring tension. Accessory springs are available through your POLARIS dealer.

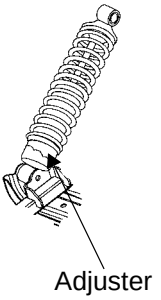

Handlebars

The handlebars can be adjusted for rider preference.

WARNING! Improper adjustment of the handlebars or incorrect torquing of the adjuster block tightening bolts can cause limited steering or loosening of the handlebars, resulting in loss of control and serious injury or death. Follow the adjustment procedures exactly, or see your POLARIS dealer for service.

1. Remove the upper headlight pod.
2. Loosen the four handlebar bolts.
3. Adjust the handlebar to the desired height. Be sure the handlebars do not contact the gas tank or any other part of the machine when turned fully to the left or right.
4. Torque the front two bolts to 10-12 ft-lbs (14-17 Nm), then torque the rear two bolts. A gap of up to 1/8" (3 mm) will remain at the rear of the clamp blocks.

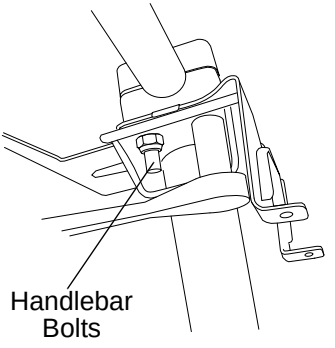

MAINTENANCE

Throttle Body/Idle RPM

Idle RPM is preset by the manufacturer. If the engine idle speed is not satisfactory, please see your POLARIS dealer or other qualified service facility for adjustment.

Throttle Cable Freeplay

1. Remove the four cover screws from the right handlebar control and remove the cover.
2. With the handlebars straight ahead, place very light pressure on the throttle lever. A gap of 2-3 mm should be visible between the throttle arm stop pin and the throttle arm.

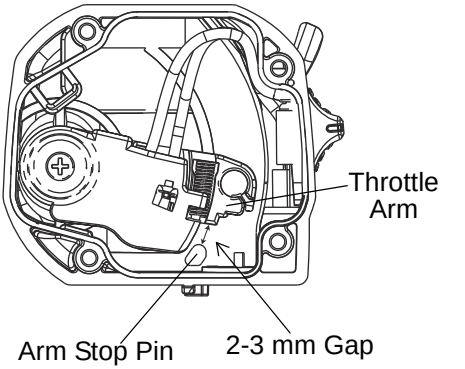

If adjustment is needed:

1. Locate the throttle cable adjuster. Squeeze the end of the rubber boot and slide it back far enough to expose the inline cable adjuster locknut.
2. Loosen the adjuster lock nut.
3. Rotate the boot to turn the adjuster until 2-3 mm of freeplay is achieved between the stop pin and the throttle arm. *While adjusting freeplay, flip the throttle lever back and forth repeatedly.*

(continued on next page)

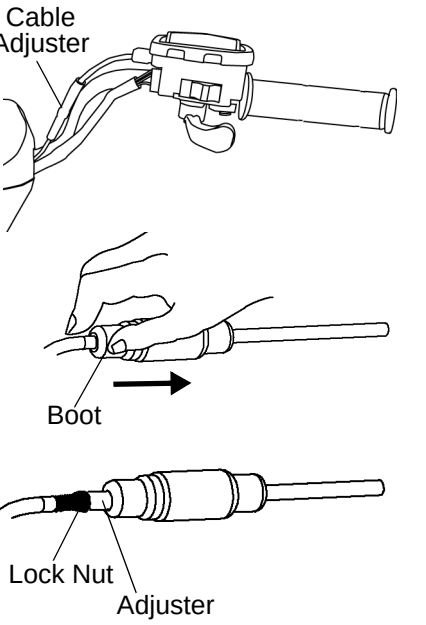

Throttle Cable Freeplay

4. Place the transmission in PARK. Lock the parking brake.
5. Start the engine and allow the idle to stabilize. If necessary, tap the throttle lever to ensure the idle speed settles.
6. If idle speed remains above or below the recommended setting (see specification pages), verify the correct gap. If gap is correct and idle speed is still not satisfactory, please see your POLARIS dealer or other qualified service facility for service.
7. With the engine running, turn the handlebars fully to the left and right. Tap the throttle lever at each turn, verifying that idle RPM returns to the recommended setting. If idle speed increases, it may be necessary to increase the gap between the stop pin and throttle arm, but do not exceed the recommended 2-3 mm gap.
8. When adjustments are complete, tighten the locknut.
9. Squeeze the end of the rubber boot and slide it over the cable adjuster to its original position.
10. Ensure the control cover seal is in place, then reinstall the cover and screws.

MAINTENANCE
Cleaning and Storage
Washing the Vehicle

Keeping your POLARIS vehicle clean will not only improve its appearance but it can also extend the life of various components.

NOTICE: High water pressure may damage components. POLARIS recommends washing the vehicle by hand or with a garden hose, using mild soap.

Certain products, including insect repellents and chemicals, will damage plastic surfaces. Do not allow these types of products to contact the vehicle.

The best and safest way to clean your POLARIS vehicle is with a garden hose and a pail of mild soap and water.

1. Use a professional-type washing cloth, cleaning the upper body first and the lower parts last.
2. Rinse with clean water frequently.
3. Dry surfaces with a chamois to prevent water spots.

Washing Tips

- Avoid the use of harsh cleaners, which can scratch the finish.
- Do not use a power washer to clean the vehicle.
- Do not use medium to heavy duty compounds on the finish.
- Always use clean cloths and pads for cleaning and polishing. Old or reused cloths and pads may contain dirt particles that will scratch the finish.

Cleaning and Storage

Washing the Vehicle

If a high pressure water system is used for cleaning (not recommended), exercise extreme caution. The water may damage components and could remove paint and decals. Avoid directing the water stream at the following items:

- Wheel bearings
- Radiator
- Transmission seals
- Cab and body panels
- Electrical components
- Switches and controls
- Fuel system components
- Labels and decals

If an informational or graphic label becomes illegible or comes off, contact your POLARIS dealer to purchase a replacement. Replacement *safety* labels are provided by POLARIS at no charge.

Grease all zerk fittings immediately after washing. Allow the engine to run for a while to evaporate any water that may have entered the engine or exhaust system.

Polishing the Vehicle

POLARIS recommends the use of common household aerosol furniture polish for polishing the finish on your POLARIS vehicle. Follow the instructions on the container.

Polishing Tips

- Avoid the use of automotive products, some of which can scratch the finish of your vehicle.
- Always use clean cloths and pads for cleaning and polishing. Old or reused cloths and pads may contain dirt particles that will scratch the finish.

MAINTENANCE
Cleaning and Storage
Storage Tips

NOTICE: Starting the engine during the storage period will disturb the protective film created by fogging and damage could occur. Never start the engine during the storage period.

Clean the Exterior

Make any necessary repairs and clean the vehicle as recommended. See page 134.

Stabilize the Fuel

1. Fill the fuel tank.
2. Add POLARIS Carbon Clean Fuel Treatment or POLARIS Fuel Stabilizer or equivalent fuel treatments or stabilizers. Follow the instructions on the container for the recommended amount. Carbon Clean removes water from fuel systems, stabilizes fuel and removes carbon deposits from pistons, rings, valves and exhaust systems.
3. Allow the engine to run for 15-20 minutes to allow the stabilizer to disperse through the entire fuel delivery system.

Oil and Filter

Change the oil and filter. See page 98.

Air Filter / Air Box

1. Inspect and clean (or replace) the pre-cleaner and air filter. See page 113.
2. Clean the air box.

Fluid Levels

Inspect the fluid levels. Add or change fluids as recommended in the Periodic Maintenance Chart beginning on page 92.

- Demand drive unit (front gearcase)
- Rear gearcase
- Transmission
- Brake fluid (change every two years and any time the fluid looks dark or contaminated)
- Coolant (test strength/fill)

Cleaning and Storage

Storage Tips

Fog the Engine

1. After stabilizing the fuel, remove the spark plug and add 2-3 tablespoons of engine oil. To access the plug hole, use a section of clear 1/4" hose and a small plastic squeeze bottle filled with the pre-measured amount of oil.
2. Reinstall the spark plug. Torque to specification.
3. Apply dielectric grease to the inside of each spark plug cap and reinstall the caps onto the plugs.
4. Turn the engine over several times using electric start. Oil will be forced in and around the piston rings and ring lands, coating the cylinder with a protective film of fresh oil.
5. If fuel system additive is not used, the fuel tank, fuel lines, and injectors should be completely drained of gasoline.

Inspect and Lubricate

Inspect all cables and lubricate all areas of the vehicle as recommended in the Periodic Maintenance Chart beginning on page 92.

Battery Storage

See pages 128-129 for storage and charging procedures. Store the battery in a cool, dry place.

Storage Area/Covers

Set the tire pressure and safely support the ATV with the tires slightly off the ground. Be sure the storage area is well ventilated. Cover the vehicle with a genuine POLARIS cover. Do not use plastic or coated materials. They do not allow enough ventilation to prevent condensation, and may promote corrosion and oxidation.

MAINTENANCE
Cleaning and Storage Accessories

Auxiliary power outlets provide 12-volt power for operating accessories. Accessory outlets are available for all models. POLARIS also has a wide range of additional accessories available for your ATV. Always install accessories that are approved for ATV use. Your POLARIS dealer can assist.

Transporting the ATV

Follow these procedures when transporting the vehicle.

1. Stop the engine.
2. Place the transmission in PARK.
3. Lock the parking brake.
4. Secure the fuel cap, oil cap and seats.
5. Always tie the frame of the ATV to the transporting unit securely with suitable straps or rope. Do not attach tie straps to the front A-arm bolt pockets, racks or handlebars.
6. Remove the key to prevent loss during transporting.

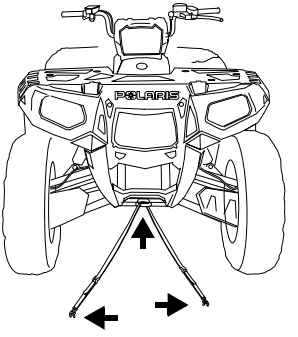

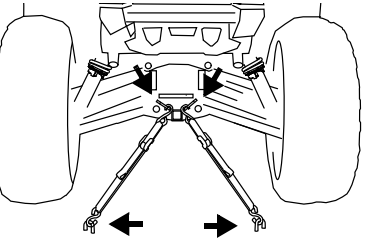

Drive Belt Wear/Burn

Possible Cause	Solution
Driving onto a pickup or tall trailer in high range	Use low range during loading.
Starting out going up a steep incline	Use low range or turn around using the K-turn (see page 70).
Driving at low RPM or ground speed (3-7 MPH)	Drive at a higher speed or use low range more frequently. See page 126.
Insufficient warm-up at low ambient temperatures	Warm the engine at least 5 minutes. With the transmission in neutral, advance the throttle to about 1/8 throttle in short bursts, 5 to 7 times. The belt will become more flexible and prevent belt burning.
Slow/easy clutch engagement	Use the throttle quickly and effectively.
Towing/pushing at low RPM/low ground speed	Use low range only.
Utility use/plowing	Use low range only.
Stuck in mud or snow	Shift the transmission to low range and carefully use fast, aggressive throttle application to engage clutch. **WARNING!** Excessive throttle may cause loss of control and vehicle overturn.
Climbing over large objects from a stopped position	Shift the transmission to low range and carefully use fast, brief, aggressive throttle application to engage clutch. **WARNING!** Excessive throttle may cause loss of control and vehicle overturn.
Belt slippage from water or snow ingestion into the PVT system	Dry out the PVT. See page 126. Inspect clutch seals for damage if repeated leaking occurs.
Clutch malfunction	Your POLARIS dealer can assist.
Poor engine performance	Check for fouled plugs or foreign material in gas tank or fuel lines. Your POLARIS dealer can assist.
Slippage from failure to warm up belt	Always warm up the belt by operating below 30 mph for one mile (5 miles or more when temperature is below freezing).
Wrong or missing belt	Install the recommended belt.
Improper break-in	Always break in a new belt and/or clutch. See page 57.

TROUBLESHOOTING

Engine Doesn't Turn Over

Possible Cause	Solution
Low battery voltage	Recharge the battery to 12.8 VDC
Loose battery connections	Check all connections and tighten
Loose solenoid connections	Check all connections and tighten

Engine Turns Over, Fails to Start

Possible Cause	Solution
Out of fuel	Refuel, cycle key to ON position three times for 5 seconds each, then start
Water is present in fuel	Drain the fuel system and refuel
Old or non-recommended fuel	Replace with fresh recommended fuel
Fouled or defective spark plug(s)	Inspect plugs and replace if necessary
No spark to spark plug	Inspect plugs, verify stop switch is on
Water or fuel in crankcase	Your POLARIS dealer can assist.
Low battery voltage	Recharge the battery to 12.8 VDC
Mechanical failure	Your POLARIS dealer can assist.

Engine Backfires

Possible Cause	Solution
Weak spark from spark plug	Inspect, clean and/or replace spark plug(s)
Incorrect spark plug gap or heat range	Set gap to specs or replace plugs
Old or non-recommended fuel	Replace with fresh recommended fuel
Incorrectly installed spark plug wires	Your POLARIS dealer can assist.
Incorrect ignition timing	Your POLARIS dealer can assist.
Mechanical failure	Your POLARIS dealer can assist.
Loose ignition connections	Check all connections and tighten
Water present in fuel	Replace with fresh recommended fuel
Leaking exhaust components	Your POLARIS dealer can assist.

Engine Pings or Knocks

Possible Cause	Solution
Poor quality or low octane fuel	Replace with recommended fuel
Incorrect ignition timing	Your POLARIS dealer can assist.
Incorrect spark plug gap or heat range	Set gap to specs or replace plugs

Engine Runs Irregularly, Stalls or Misfires

Possible Cause	Solution
Fouled or defective spark plug(s)	Inspect, clean and/or replace spark plugs
Worn or defective spark plug wires	Your POLARIS dealer can assist.
Incorrect spark plug gap or heat range	Set gap to specs or replace plugs
Loose ignition connections	Check all connections and tighten
Water present in fuel	Replace with new fuel
Low battery voltage	Recharge battery to 12.8 VDC
Kinked or plugged fuel tank vent line	Inspect and replace
Incorrect fuel	Replace with recommended fuel
Clogged air filter	Inspect and clean or replace
Reverse speed limiter malfunction	Your POLARIS dealer can assist.
Electronic throttle control malfunction	Your POLARIS dealer can assist.
Other mechanical failure	Your POLARIS dealer can assist.
Possible Lean Fuel Cause	**Solution**
Low or contaminated fuel	Add or change fuel, clean the fuel system
Kinked or plugged fuel tank vent line	Inspect and replace
Low octane fuel	Replace with recommended fuel
Incorrect fuel	Replace with recommended fuel
Possible Rich Fuel Cause	**Solution**
Fuel is very high octane	Replace with lower octane fuel
Stopping/starting without adequate warm-up	Allow engine to warm up before operating and/or stopping
Incorrect fuel	Replace with recommended fuel
Clogged air filter	Inspect and clean or replace

TROUBLESHOOTING

Engine Stops or Loses Power

Possible Cause	Solution
Out of fuel	Refuel, cycle key to ON position three times for 5 seconds each, then start
Kinked or plugged fuel vent line	Inspect and replace
Water is present in fuel	Replace with new fuel
Fouled or defective spark plug(s)	Inspect, clean and/or replace spark plugs
Worn or defective spark plug wires	Your POLARIS dealer can assist.
Incorrect spark plug gap or heat range	Set gap to specs or replace plug
Loose ignition connections	Check all connections and tighten
Low battery voltage	Recharge the battery to 12.8 VDC
Incorrect fuel	Replace with fresh recommended fuel
Clogged air filter	Inspect and clean or replace
Reverse speed limiter malfunction	Your POLARIS dealer can assist.
Electronic throttle control malfunction	Your POLARIS dealer can assist.
Other mechanical failure	Your POLARIS dealer can assist.
Overheated engine	Clean radiator screen and core, clean engine exterior. Your POLARIS dealer can assist.

Engine Overheating

Possible Cause	Solution
Debris lodged in screen	Clean the screen.
Plugged Radiator	Use a garden hose to flush any debris from the radiator fins. NOTICE: High pressure washers can deform the radiator fins and reduce cooling efficiency.

POLARIS PRODUCTS

Part Number	Description
	Engine Lubricant
2870791	Fogging Oil (12 oz. Aerosol)
2876244	PS-4 Full Synthetic 5W-50 4-Cycle Oil (qt./.95 l)
2876245	PS-4 Full Synthetic 5W-50 4-Cycle Oil (gal./3.8 l)
2878920	PS-4 Extreme Duty Synthetic 10W-50 4-Cycle Oil (qt./.95 l)
2878919	PS-4 Extreme Duty Synthetic 10W-50 4-Cycle Oil (gal./3.8 l)
	Gearcase / Transmission Lubricants
2878068	AGL Full Synthetic Gearcase Lubricant & Transmission Fluid (qt./.95 l)
2878069	AGL Full Synthetic Gearcase Lubricant & Transmission Fluid (gal./3.8 l)
2877922	Demand Drive Plus Fluid (qt./.95 l)
2877923	Demand Drive Plus Fluid (gal./3.8 l)
2870465	Pump for Gallon (3.8 l) Jug
	Coolant
2880514	Antifreeze 50/50 Premix (qt./.95 l)
2880513	Antifreeze 50/50 Premix (gal./3.8 l)
	Grease / Specialized Lubricants
2871312	Grease Gun Kit, Premium All Season
2871322	All Season Grease (3 oz./89 ml cartridge)
2871423	All Season Grease (14 oz./414 ml cartridge)
2871460	Premium Starter Grease
2871515	U-Joint Grease (3 oz./89 ml cartridge)
2871551	U-Joint Grease (14 oz./414 ml cartridge)
2871329	Dielectric Grease (Nyogel™)
	Additives / Miscellaneous
2871326	Carbon Clean
2870652	Fuel Stabilizer
2872189	DOT 4 Brake Fluid
2871956	Loctite™ 565 Thread Sealant
2859044	POLARIS Battery Tender™ Charger

SPECIFICATIONS

SPORTSMAN 850 / 850 SP	
Maximum Weight Capacity	575 lbs. (261 kg) 850/850 SP 275 lbs. (125 kg) 850 High Lifter (includes operator, cargo and accessories)
Dry Weight	759 lbs. (344 kg) (850) 767 lbs. (348 kg) (850 SP) 921 lbs. (418 kg) (850 High Lifter)
Fuel Capacity	5.25 gal. (20 l)
Engine Oil Capacity	2 qts. (1.9 l)
Coolant Capacity	2 qts. (1.9 l)
Rear Gearcase Oil Capacity	7.1 oz. (210 ml)
Demand Drive Fluid Capacity	9.3 oz. (275 ml)
Transmission Oil Capacity	37 oz. (1100 ml)
Front Rack/Storage Box Capacity	120 lbs. (54 kg) 850/850 SP 0 lbs. (0 kg) 850 High Lifter
Rear Rack Capacity	240 lbs. (109 kg) 850/850 SP 75 lbs. (34 kg) 850 High Lifter
Receiver Hitch Tongue Capacity	150 lbs. (68 kg) (Rear rack load and tongue weight not to exceed 240 lbs. /109 kg)
Hitch Towing Rating	1500 lbs. (680.4 kg)
Unbraked Trailer Towing Capacity*	1914 lbs. (868 kg)
Overall Length	83.25 in. (211 cm)
Overall Width	47.6 in. (121 cm)
Overall Height	50.75 in. (129 cm)
Wheelbase	53 in. (134.6 cm)
Ground Clearance	11.6 in. (29.5 cm) 850/850 SP 13.5 in. (34.3 cm) 850 High Lifter
Minimum Turning Radius (unloaded)	84 in. (213 cm) 850/850 SP 168 in. (427 cm) 850 High Lifter
Engine	EHO850LE
Displacement	850 cc
Bore x Stroke	87 x 71.5
Alternator Output	475w @1200 RPM/Peak 630w
Compression Ratio	11:1
Starting System	Electric
Ignition System	Electronic Fuel Injection
Ignition Timing	6° +/- 5° BTDC @ 1200 RPM, Engine warm
Idle RPM	1200 +/- 50
Throttle Body/Size	Mikuni Dual Bore/42 mm
Spark Plug Type / Gap	REA6MC / .035 in. (0.9 mm)
Lubrication System	Wet Sump
Driving System Type	Automatic PVT (POLARIS Variable Transmission)

* Based on EU Directive 76/432/EC

SPORTSMAN 850 / SPORTSMAN 850 SP	
Front Suspension	*850/850 SP:* Dual a-arm with 9.2" (23 cm) travel *850 High Lifter:* Dual a-arm with 7.4" (19 cm) travel
Rear Suspension	*850/850 SP:* Progressive rate with 10.2" (26 cm) travel *850 High Lifter:* Progressive rate with 6.7" (17 cm) travel
Transmission	H/L/N/R/P
Gear Reduction, Low	5.034:1 (850/850 SP) 6.5:1 (850 High Lifter)
Gear Reduction, Reverse	4.508:1 (850/850 SP) 5.82:1 (850 High Lifter)
Gear Reduction, High	2.367:1 (850/850 SP) 4.48:1 (850 High Lifter)
Drive Ratio, Front	3.818:1
Drive Ratio, Rear	3.7:1
Tires/Pressure, Front	*850/850 SP:* 26x8-14 / 7 psi (48.3 kPa) *850 High Lifter:* 29.5x9.5 / 7 psi (48.3 kPa)
Tires/Pressure, Rear	*850/850 SP:* 26x10-14 / 7 psi (48.3 kPa) *850 High Lifter:* 29.5x9.5 / 7 psi (48.3 kPa)
Brakes, Front/Rear	Single-Control Hydraulic Disc, All Wheel
Brakes, Auxiliary	Foot-Activated Hydraulic Disc, Rear Wheel
Brake, Parking	Hydraulic lock, all wheel
Headlight (Pod Models)	1 Single Beam (50 watt)
Headlight (Bumper)	2 Single Beam (50 watt)
Taillights	7 watts
Brake Light	27 watts
Instrument Cluster	Digital/Analog

Clutching (850/850 SP)

Altitude		Shift Weight	Drive Clutch Spring	Driven Clutch Spring	Helix*
Meters (Feet)	0-1800 (0-6000)	24-63 PN 5632215	Orange PN 7044279	Red/White PN 3235088	58-66F 45°BA PN 3235630
	1800-3700 (6000-12000)	24-60 PN 5632216	Orange PN 7044279	Red/White PN 3235088	58-66F 45°BA PN 3235630

*EBS models require no helix/spring adjustment

Clutching (850 High Lifter)

Altitude		Shift Weight	Drive Clutch Spring	Driven Clutch Spring	Helix*
Meters (Feet)	0-1800 (0-6000)	27-93 PN 5137856	Red/Black PN 7043500	Black/White PN 7044086	58-66FR 34°BA PN 3235590
	1800-3700 (6000-12000)	N/A	N/A	N/A	N/A

SPECIFICATIONS

SPORTSMAN Touring 850 SP	
Maximum Weight Capacity	575 lbs. (261 kg) (includes operator, passenger, cargo, accessories)
Dry Weight	798 lbs. (362 kg)
Front Rack/Storage Box Capacity	120 lbs. (54 kg)
Rear Rack Capacity	240 lbs. (109 kg)
Hitch Tongue Weight	150 lbs. (55 kg) (Rear rack capacity and tongue weight not to exceed 240 lbs./55 kg)
Hitch Towing Rating	1500 lbs. (680 kg) on level ground
Unbraked Trailer Towing Capacity*	1995 lbs. (905 kg)
Overall Length	86.5 in. (219.7 cm)
Overall Width	47.6 in. (121 cm)
Overall Height	58.25 in. (148 cm)
Wheelbase	57 in. (145 cm)
Ground Clearance	11.6 in. (29.5 cm)
Minimum Turning Radius	96 in. (244 cm) unloaded
Fuel Capacity	5.25 gal. (20 l)
Engine Oil Capacity	2 qts. (1.9 l)
Coolant Capacity	2 qts. (1.9 l)
Demand Drive Fluid Capacity	9.3 oz. (275 ml)
Transmission Fluid Capacity	37 oz. (1100 ml)
Rear Gearcase Fluid Capacity	7.1 oz. (210 ml)
Engine	EH085OLE
Displacement	850 cc
Bore x Stroke	87 x 71.5 mm
Alternator Output	475w @ 1200 RPM/Peak 630w
Compression Ratio	11.0:1
Starting System	Electric
Ignition System	Bosch EFI (ECU Controlled)
Ignition Timing	6° +/- 5° BTDC @ 1200 RPM
Idle RPM	1200 +/- 50
Throttle Body/Size	Mikuni Dual Bore/42 mm
Spark Plug / Gap	REA6MC / .035 in. (0.9 mm)

* Based on EU Directive 76/432/EC

SPORTSMAN Touring 850 SP	
Lubrication System	Pressurized Wet Sump
Transmission Type	Automatic PVT (POLARIS Variable Transmission) In-Line H-L-N-R-P
Front Suspension	Dual a-arm, 9" (22.9 cm) travel
Rear Suspension	Dual a-arm with Rolled IRS, 10" (25.4 cm) travel
Gear Reduction, Low	5.034:1
Gear Reduction, Reverse	4.508:1
Gear Reduction, High	2.367:1
Drive Ratio, Front	3.818:1
Drive Ratio, Rear	3.7:1
Tire Type/Pressure, Front	26 x 8 - 14 / 7 psi (48.3 kPa)
Tire Type/Pressure, Rear	26 x 10 - 14 / 7 psi (48.3 kPa)
Brakes, Front/Rear	Single-Control Hydraulic Disc, All-Wheel
Brake, Auxiliary	Foot-Activated Hydraulic Disc, Rear Wheel
Brake, Parking	Hydraulic lock, all wheel
Headlight	1 Single Beam on Headlight Pod (50 watt) 2 Single Beam on Bumper (50 watt)
Taillight	12v/7 watts
Brake Light	12v/27 watts
Instrumentation	Digital/Analog

Clutching

Altitude		Shift Weight	Drive Clutch Spring	Driven Clutch Spring	Helix*
Meters (Feet)	0-1800 (0-6000)	24-63 PN 5632215	Orange PN 7044279	Red/White PN 3235088	105-165 BA3 PN 3235092
	1800-3700 (6000-12000)	24-60 PN 5632216	Orange PN 7044279	Red/White PN 3235088	105-165 BA3 PN 3235092

*EBS models require no helix/spring adjustment

SPECIFICATIONS

SPORTSMAN XP 1000	
Maximum Weight Capacity	575 lbs. (261 kg) XP 1000 275 lbs. (125 kg) High Lifter (includes operator, cargo and accessories)
Dry Weight	767 lbs. (348 kg) XP 1000 974 lbs. (442 kg) High Lifter
Fuel Capacity	5.25 gal. (20 l)
Engine Oil Capacity	2 qts. (1.9 l)
Coolant Capacity	2 qts. (1.9 l)
Rear Gearcase Oil Capacity	7.1 oz. (210 ml)
Demand Drive Fluid Capacity	9.3 oz. (275 ml)
Transmission Oil Capacity	37 oz. (1100 ml)
Front Rack/Storage Box Capacity	120 lbs. (54 kg) XP 1000 0 lbs. (0 kg) High Lifter
Rear Rack Capacity	240 lbs. (109 kg) XP 1000 75 lbs. (34 kg) High Lifter
Receiver Hitch Tongue Capacity	150 lbs. (68 kg) (Rear rack load and tongue weight not to exceed 240 lbs. /109 kg)
Hitch Towing Rating	1500 lbs. (680.4 kg)
Unbraked Trailer Towing Capacity*	1914 lbs. (868 kg)
Overall Length	83.25 in. (211 cm)
Overall Width	47.6 in. (121 cm)
Overall Height	50.75 in. (129 cm)
Wheelbase	53 in. (134.6 cm)
Ground Clearance	11.6 in. (29.5 cm) XP 1000 13.5 in. (34.3 cm) High Lifter
Minimum Turning Radius (unloaded)	84 in. (213 cm) XP 1000 168 in. (427 cm) High Lifter
Engine	EHO952LE
Displacement	952 cc
Bore x Stroke	90.5 x 74
Alternator Output	475w @1200 RPM/Peak 630w
Compression Ratio	11:1
Starting System	Electric
Ignition System	Electronic Fuel Injection
Ignition Timing	6° +/- 5° BTDC @ 1200 RPM, Engine warm
Idle RPM	1200 +/- 50
Throttle Body/Size	Mikuni Dual Bore/42 mm
Spark Plug Type / Gap	AUTOLITE 5682 / .030 in. (0.76 mm)
Lubrication System	Wet Sump
Driving System Type	Automatic PVT (POLARIS Variable Transmission)

* Based on EU Directive 76/432/EC

SPORTSMAN XP 1000	
Front Suspension	*XP 1000:* Dual a-arm with 9.2" (23 cm) travel *High Lifter:* Dual a-arm with 7.4" (19 cm) travel
Rear Suspension	*XP 1000:* Progressive rate with 10.2" (26 cm) travel *High Lifter:* Progressive rate with 6.7" (17 cm) travel
Transmission	H/L/N/R/P
Gear Reduction, Low	5.034:1 (XP 1000) 6.5:1 (High Lifter)
Gear Reduction, Reverse	4.508:1 (XP 1000) 5.82:1 (High Lifter)
Gear Reduction, High	2.367:1 (XP 1000) 4.48:1 (High Lifter)
Drive Ratio, Front	3.818:1
Drive Ratio, Rear	3.7:1
Tires/Pressure, Front	*XP 1000:* 26x8-14 / 7 psi (48.3 kPa) *High Lifter:* 29.5x9.5 / 7 psi (48.3 kPa)
Tires/Pressure, Rear	*XP 1000:* 26x10-14 / 7 psi (48.3 kPa) *High Lifter:* 29.5x9.5 / 7 psi (48.3 kPa)
Brakes, Front/Rear	Single-Control Hydraulic Disc, All Wheel
Brakes, Auxiliary	Foot-Activated Hydraulic Disc, Rear Wheel
Brake, Parking	Hydraulic lock, all wheel
Headlight (Pod Models)	1 Single Beam (50 watt)
Headlight (Bumper)	2 Single Beam (50 watt)
Taillights	7 watts
Brake Light	27 watts
Instrument Cluster	Digital/Analog

Clutching (XP 1000)

Altitude		Shift Weight	Drive Clutch Spring	Driven Clutch Spring	Helix*
Meters (Feet)	0-1800 (0-6000)	24-70 PN 5633136	Orange PN 7044279	Black/White Lettering PN 7044086	58-66F 45°BA PN 3235630
	1800-3700 (6000-12000)	24-60 PN 5632216	Purple PN 7043805	Black/White Lettering PN 7044086	58-66F 45°BA PN 3235630

*EBS models require no helix/spring adjustment

Clutching (XP 1000 High Lifter)

Altitude		Shift Weight	Drive Clutch Spring	Driven Clutch Spring	Helix*
Meters (Feet)	0-1800 (0-6000)	27-93 PN 5137856	Red/Black PN 7043500	Black/White PN 7044086	58-66FR 34°BA PN 3235590
	1800-3700 (6000-12000)	N/A	N/A	N/A	N/A

SPECIFICATIONS

SPORTSMAN XP Touring 1000	
Maximum Weight Capacity	575 lbs. (261 kg) (includes operator, passenger, cargo, accessories)
Dry Weight	798 lbs. (362 kg)
Front Rack/Storage Box Capacity	120 lbs. (54 kg)
Rear Rack Capacity	240 lbs. (109 kg)
Hitch Tongue Weight	150 lbs. (55 kg) (Rear rack capacity and tongue weight not to exceed 240 lbs./55 kg)
Hitch Towing Rating	1500 lbs. (680 kg) on level ground
Unbraked Trailer Towing Capacity*	1995 lbs. (905 kg)
Overall Length	86.5 in. (219.7 cm)
Overall Width	47.6 in. (121 cm)
Overall Height	58.25 in. (148 cm)
Wheelbase	57 in. (145 cm)
Ground Clearance	11.6 in. (29.5 cm)
Minimum Turning Radius	96 in. (244 cm) unloaded
Fuel Capacity	5.25 gal. (20 l)
Engine Oil Capacity	2 qts. (1.9 l)
Coolant Capacity	2 qts. (1.9 l)
Demand Drive Fluid Capacity	9.3 oz. (275 ml)
Transmission Fluid Capacity	37 oz. (1100 ml)
Rear Gearcase Fluid Capacity	7.1 oz. (210 ml)
Engine	EHO952LE
Displacement	952 cc
Bore x Stroke	90.5 x 74
Alternator Output	475w @1200 RPM/Peak 630w
Compression Ratio	11:1
Starting System	Electric
Ignition System	Electronic Fuel Injection
Ignition Timing	6° +/- 5° BTDC @ 1200 RPM, Engine warm
Idle RPM	1200 +/- 50
Throttle Body/Size	Mikuni Dual Bore/42 mm
Spark Plug Type / Gap	AUTOLITE 5682 / .030 in. (0.76 mm)

* Based on EU Directive 76/432/EC

SPORTSMAN XP Touring 1000	
Lubrication System	Pressurized Wet Sump
Transmission Type	Automatic PVT (POLARIS Variable Transmission) In-Line H-L-N-R-P
Front Suspension	Dual a-arm, 9" (22.9 cm) travel
Rear Suspension	Dual a-arm with Rolled IRS, 10" (25.4 cm) travel
Gear Reduction, Low	5.034:1
Gear Reduction, Reverse	4.508:1
Gear Reduction, High	2.367:1
Drive Ratio, Front	3.818:1
Drive Ratio, Rear	3.7:1
Tire Type/Pressure, Front	26 x 8 - 14 / 7 psi (48.3 kPa)
Tire Type/Pressure, Rear	26 x 10 - 14 / 7 psi (48.3 kPa)
Brakes, Front/Rear	Single-Control Hydraulic Disc, All-Wheel
Brake, Auxiliary	Foot-Activated Hydraulic Disc, Rear Wheel
Brake, Parking	Hydraulic lock, all wheel
Headlight	1 Single Beam on Headlight Pod (50 watt) 2 Single Beam on Bumper (50 watt)
Taillight	12v/7 watts
Brake Light	12v/27 watts
Instrumentation	Digital/Analog

Clutching

*EBS models require no helix/spring adjustment

Altitude		Shift Weight	Drive Clutch Spring	Driven Clutch Spring	Helix*
Meters (Feet)	0-1800 (0-6000)	24-70 PN 5633136	Orange PN 7044279	Black/White Lettering PN 7044086	58-66F 45°BA PN 3235630
	1800-3700 (6000-12000)	24-60 PN 5632216	Purple PN 7043805	Black/White Lettering PN 7044086	58-66F 45°BA PN 3235630

WARRANTY

LIMITED WARRANTY

POLARIS Industries Inc., 2100 Highway 55, Medina, MN 55340 (POLARIS) gives a SIX MONTH LIMITED WARRANTY on all components of your POLARIS vehicle against defects in material or workmanship. POLARIS further warrants that the spark arrester in this product will meet the efficiency requirements of USFS standard 5100-1C for at least 1000 hours when subjected to normal use and when maintenance and installation are in accordance with POLARIS recommendations.

This warranty covers parts and labor charges for repair or replacement of defective parts and begins on the date of purchase by the original retail purchaser. This warranty is transferable to another owner during the warranty period through a POLARIS dealer, but any such transfer will not extend the original term of the warranty. The duration of this warranty may vary by international region based upon local laws and regulations.

Registration

At the time of sale, the Warranty Registration Form must be completed by your dealer and submitted to POLARIS within ten days of purchase. Upon receipt of this registration, POLARIS will record the registration for warranty. No verification of registration will be sent to the purchaser as the copy of the Warranty Registration Form will be your proof of warranty coverage. If you have not signed the original registration and received the customer copy, please contact your dealer immediately. NO WARRANTY COVERAGE WILL BE ALLOWED UNLESS YOUR VEHICLE IS REGISTERED WITH POLARIS. Initial dealer preparation and set-up of your vehicle is very important in ensuring trouble-free operation. Purchasing a machine in the crate or without proper dealer set-up will void your warranty coverage.

Warranty Coverage And Exclusions:

Limitations Of Warranties And Remedies

This POLARIS limited warranty excludes any failures that are not caused by a defect in material or workmanship. THIS WARRANTY DOES NOT COVER CLAIMS OF DEFECTIVE DESIGN. This warranty also does not cover acts of God, accidental damage, normal wear and tear, abuse or improper handling. This warranty also does not cover any vehicle, component, or part that has been altered structurally, modified, neglected, improperly maintained or used for racing, competition or purposes other than for which it was designed.

This warranty excludes damages or failures resulting from improper lubrication; improper engine timing; improper fuel; surface imperfections caused by external stress, heat, cold or contamination; operator error or abuse; improper component alignment, tension, adjustment or altitude compensation; snow, water, dirt or other foreign substance ingestion/contamination; improper maintenance; modified components; use of aftermarket or unapproved components, accessories, or attachments; unauthorized repairs; or repairs made after the warranty period expires or by an unauthorized repair center.

Warranty Coverage And Exclusions:

Limitations Of Warranties And Remedies

This warranty excludes damages or failures caused by abuse, accident, fire, or any other cause other than a defect in materials or workmanship and provides no coverage for consumable components, general wear items, or any parts exposed to friction surfaces, stresses, environmental conditions and/or contamination for which they were not designed or not intended, including but not limited to the following items:

- Wheels and tires
- Suspension components
- Brake components
- Seat components
- Clutches and components
- Steering components
- Batteries
- Light bulbs/Sealed beam lamps
- Filters
- Lubricants
- Bushings
- Finished and unfinished surfaces
- Carburetor/Throttle body components
- Engine components
- Drive belts
- Hydraulic components and fluids
- Circuit breakers/Fuses
- Electronic components
- Spark plugs
- Sealants
- Coolants
- Bearings

Lubricants and Fluids

1. Mixing oil brands or using non-recommended oil may cause engine damage. We recommend the use of POLARIS engine oil.

2. Damage or failure resulting from the use of non-recommended lubricants or fluids is not covered by this warranty.

This warranty provides no coverage for personal loss or expense, including mileage, transportation costs, hotels, meals, shipping or handling fees, product pick-up or delivery, replacement rentals, loss of product use, loss of profits, or loss of vacation or personal time.

WARRANTY

Warranty Coverage And Exclusions:

Limitations Of Warranties And Remedies

THE EXCLUSIVE REMEDY FOR BREACH OF THIS WARRANTY SHALL BE, AT POLARIS' OPTION, REPAIR OR REPLACEMENT OF ANY DEFECTIVE MATERIALS, COMPONENTS, OR PRODUCTS. THE REMEDIES SET FORTH IN THIS WARRANTY ARE THE ONLY REMEDIES AVAILABLE TO ANY PERSON FOR BREACH OF THIS WARRANTY. POLARIS SHALL HAVE NO LIABILITY TO ANY PERSON FOR INCIDENTAL, CONSEQUENTIAL OR SPECIAL DAMAGES OF ANY DESCRIPTION, WHETHER ARISING OUT OF EXPRESS OR IMPLIED WARRANTY OR ANY OTHER CONTRACT, NEGLIGENCE, OR OTHER TORT OR OTHERWISE. THIS EXCLUSION OF CONSEQUENTAL, INCIDENTAL, AND SPECIAL DAMAGES IS INDEPENDENT FROM AND SHALL SURVIVE ANY FINDING THAT THE EXCLUSIVE REMEDY FAILED OF ITS ESSENTIAL PURPOSE.

THE IMPLIED WARRANTY OF FITNESS FOR A PARTICULAR PURPOSE IS EXCLUDED FROM THIS LIMITED WARRANTY. ALL OTHER IMPLIED WARRANTIES (INCLUDING BUT NOT LIMITED TO THE IMPLIED WARRANTY OF MERCHANTABILITY) ARE LIMITED IN DURATION TO THE ABOVE SIX MONTH WARRANTY PERIOD. POLARIS DISCLAIMS ALL EXPRESS WARRANTIES NOT STATED IN THIS WARRANTY. SOME STATES DO NOT PERMIT THE EXCLUSION OR LIMITATION OF INCIDENTAL OR CONSEQUENTIAL DAMAGES OR ALLOW LIMITATIONS ON THE DURATION OF IMPLIED WARRANTIES, SO THE ABOVE LIMITATIONS MAY NOT APPLY TO YOU IF INCONSISTENT WITH CONTROLLING STATE LAW.

How To Obtain Warranty Service

If your vehicle requires warranty service, you must take it to a POLARIS Servicing Dealer. When requesting warranty service you must present your copy of the Warranty Registration Form to the dealer. (THE COST OF TRANSPORTATION TO AND FROM THE DEALER IS YOUR RESPONSIBILITY.) POLARIS suggests that you use your original selling dealer; however, you may use any POLARIS Servicing Dealer to perform warranty service.

In the Country where your product was purchased:

Warranty or Service Bulletin repairs must be done by an authorized POLARIS dealer. If you move or are traveling within the country where your product was purchased, Warranty and Service Bulletin repairs may be requested from any authorized POLARIS dealer that sells the same line as your product.

Outside the Country where your product was purchased:

If you are traveling temporarily outside the country where your product was purchased, you should take your product to an authorized POLARIS dealer. You must show the dealer photo identification from the country of the selling dealer's authorized location as proof of residence. Upon residence verification, the servicing dealer will be authorized to perform the warranty repair.

If you move:

If you move to another country, be sure to contact POLARIS Customer Assistance and the customs department of the destination country before you move. Product importation rules vary considerably from country to country. You may be required to present documentation of your move to POLARIS in order to continue your warranty coverage. You may also be required to obtain documentation from POLARIS in order to register your product in your new country. You should warranty register your product at a local POLARIS dealer in your new country immediately after you move to continue your warranty coverage and to ensure that you receive information and notices regarding your vehicle.

If you purchase from a private party:

If you purchase a POLARIS product from a private party, to be kept and used outside of the country in which the product was originally purchased, all warranty coverage will be denied. You must nonetheless register your product under your name and address with a local POLARIS dealer in your country to ensure that you receive safety information and notices regarding your product.

Exported Products

EXCEPT WHERE SPECIFICALLY REQUIRED BY LAW, THERE IS NO WARRANTY OR SERVICE BULLETIN COVERAGE ON THIS PRODUCT IF IT IS SOLD OUTSIDE THE COUNTRY OF THE SELLING DEALER'S AUTHORIZED LOCATION. This policy does not apply to products that have received authorization for export from POLARIS. Dealers may not give authorization for export. You should consult an authorized dealer to determine this product's warranty or service coverage if you have any questions. This policy does not apply to products registered to government officials or military personnel on assignment outside the country of the selling dealer's authorized location. This policy does not apply to Safety Bulletins.

WARRANTY

Notice

If your product is registered outside of the country where it was purchased and you have not followed the procedure set above, your product will no longer be eligible for warranty or service bulletin coverage of any kind, other than safety bulletins. Products registered to government officials or military personnel on assignment outside of the country where the product was purchased will continue to be covered by the Limited Warranty.

Please work with your dealer to resolve any warranty issues. Should your dealer require any additional assistance, they will contact the appropriate person at POLARIS.

This warranty gives you specific legal rights, and you may also have other rights which vary from state to state or in different countries. If any of the above terms are void because of federal, state, local law, all other warranty terms will remain in effect.

For questions call POLARIS Customer Assistance:

United States & Canada: 1-800-POLARIS (1-800-765-2747)

French: 1-800-268-6334

U.S.A. EPA Emissions Limited Warranty

This emissions limited warranty is in addition to the POLARIS standard limited warranty for your vehicle. POLARIS Industries Inc. warrants that at the time it is first purchased, this emissions-certified vehicle is designed, built and equipped so it conforms with applicable U.S. Environmental Protection Agency emission regulations. POLARIS warrants that the vehicle is free from defects in materials and workmanship that would cause it to fail to meet these regulations.

The warranty period for off road vehicles 100cc or greater emissions-certified vehicles starts on the date of purchase by original retail purchaser and continues for a period of 500 hours of engine operation, 5000 kilometers (3100 miles) of vehicle travel, or 30 calendar months from the date of purchase, whichever comes first. The warranty period for ATVs less than 100cc emissions-certified vehicles starts on the date of purchase by original retail purchaser and continues for a period of 250 hours of engine operation, 2500 kilometers (1550 miles) of vehicle travel, or 30 calendar months from the date of purchase, whichever comes first. This EPA emissions warranty period is extended for at least as long as the standard factory warranty that Polaris provides on the vehicle as a whole. The EPA emissions warranty period does not further extend if you purchase additional warranty coverage in the form of a service contract or other paid warranty extension, but emission-related parts may be covered subject to the terms of any such paid service contract or paid warranty extension.

This emissions limited warranty covers components whose failure increases the vehicle's regulated emissions, and it covers components of systems whose only purpose is to control emissions. Repairing or replacing other components not covered by this warranty is the responsibility of the vehicle owner. This emissions limited warranty does not cover components whose failure does not increase the vehicle's regulated emissions.

For exhaust emissions, emission-related components include any engine parts related to the following systems:

- Air-induction system
- Fuel system
- Ignition system
- Exhaust gas recirculation systems

The following parts are also considered emission-related components for exhaust emissions:

- Aftertreatment devices
- Crankcase ventilation valves
- Sensors
- Electronic control units

The following parts are considered emission-related components for evaporative emissions:

- Fuel Tank
- Fuel Cap
- Fuel Line
- Fuel Line Fittings
- Clamps*
- Pressure Relief Valves*
- Control Valves*
- Control Solenoids*
- Electronic Controls*
- Vacuum Control Diaphragms*
- Control Cables*
- Control Linkages*
- Purge Valves
- Vapor Hoses
- Liquid/Vapor Separator
- Carbon Canister
- Canister Mounting Brackets
- Carburetor Purge Port Connector

*As related to the evaporative emission control system.

WARRANTY

U.S.A. EPA Emissions Limited Warranty

Emission-related components also include any other part whose only purpose is to reduce emissions or whose failure will increase emissions without significantly degrading engine/equipment performance. The exclusive remedy for breach of this limited warranty shall be, at the exclusive option of POLARIS, repair or replacement of any defective materials, components or products. THE REMEDIES SET FORTH IN THIS LIMITED WARRANTY ARE THE ONLY REMEDIES AVAILABLE TO ANY PERSON FOR BREACH OF THIS WARRANTY. POLARIS SHALL HAVE NO LIABILITY TO ANY PERSON FOR INCIDENTAL, CONSEQUENTIAL OR SPECIAL DAMAGES OF ANY DESCRIPTION, WHETHER ARISING OUT OF EXPRESS OR IMPLIED WARRANTY OR ANY OTHER CONTRACT, NEGLIGENCE OR OTHER TORT OR OTHERWISE. THIS EXCLUSION OF CONSEQUENTIAL, INCIDENTAL, AND SPECIAL DAMAGES IS INDEPENDENT FROM AND SHALL SURVIVE ANY FINDING THAT THE EXCLUSIVE REMEDY FAILED OF ITS ESSENTIAL PURPOSE.

ALL IMPLIED WARRANTIES (INCLUDING BUT NOT LIMITED TO ANY IMPLIED WARRANTIES OF MERCHANTABILITY AND FITNESS FOR A PARTICULAR PURPOSE) ARE LIMITED IN DURATION TO THE WARRANTY PERIOD DESCRIBED HEREIN. POLARIS DISCLAIMS ALL EXPRESS WARRANTIES NOT STATED IN THIS WARRANTY. Some states do not allow limitations on how long an implied warranty lasts, so the above limitation may not apply if it is inconsistent with the controlling state law.

This limited warranty excludes failures not caused by a defect in material or workmanship. This limited warranty does not cover damage due to accidents, abuse or improper handling, maintenance or use. This limited warranty also does not cover any engine that has been structurally altered, or when the vehicle has been used in racing competition. This limited warranty also does not cover physical damage, corrosion or defects caused by fire, explosions or other similar causes beyond the control of POLARIS.

Owners are responsible for performing the scheduled maintenance identified in the owner's manual. POLARIS may deny warranty claims for failures that have been caused by the owner's or operator's improper maintenance or use, by accidents for which POLARIS has no responsibility, or by acts of God.

Any qualified repair shop or person may maintain, replace, or repair the emission control devices or systems on your vehicle. An authorized POLARIS dealer can perform any service that may be necessary for your vehicle. POLARIS also recommends POLARIS parts, however equivalent parts may be used for such service. It is a potential violation of the Clean Air Act if a part supplied by an aftermarket parts manufacturer reduces the effectiveness of the vehicle's emission controls. Tampering with emission controls is prohibited by federal law.

California Residents

Certain POLARIS Off-Road Vehicles are available in 49-state and 50-state versions. Only the 50-state models are certified for sale in California. The 50-state models available for sale in California are identified by the letter “B” in the ninth position of the model number (e.g., R16RTE87B). The POLARIS 50-state models are designed and built with features such as a reduced cargo box capacity. Any modifications to these features may be a violation of the applicable California regulations and may void this limited emissions warranty offered by the manufacturer.

If you have any questions regarding your warranty rights and responsibilities, please contact POLARIS Customer Assistance:

United States & Canada: 1-800-POLARIS (1-800-765-2747)

French: 1-800-268-6334

MAINTENANCE LOG

Present this section of your manual to your dealer each time your vehicle is serviced. This will provide you and future owners with an accurate log of maintenance and services performed.

DATE	MILES (KM) OR HOURS	TECHNICIAN	SERVICE PERFORMED / COMMENTS

MAINTENANCE LOG

DATE	MILES (KM) OR HOURS	TECHNICIAN	SERVICE PERFORMED / COMMENTS

INDEX

0-9

4X4 Switch 30, 41

A

Accessories 138
Active Descent Control System. . . . 43
Air Filter 113
All Wheel Drive System 41-42
Auxiliary Foot Brake 107

B

Battery
- Charging 129
- Charging (Sealed Battery) 130
- Extreme Use 40
- Installation 128
- Removal 127
- Storage 128

Belt Life 37
Beverage Holders. 40
Box, Front (Touring) 39
Brake Fluid, Auxiliary Foot Brake . 36
Brake Fluid, Main Brake System. . . 34
Brake Lever 33
Brake, Foot 36, 107
Brake, Hand Lever. 107
Brake, Parking 35
Brakelight Lamp Replacement . . . 119
Brakes 107
Break-In Period 56-57

C

Camber Adjustment 131
Cargo 77-78
Cargo Loading 76
Caster Adjustment 131
Check Engine Indicator 51
Cleaning and Storage 134-138
Clutching
- 850 High Lifter 145
- 850/850 SP 145
- Touring 850 SP 147
- XP 1000 149
- XP 1000 High Lifter 149
- XP Touring 1000 151

Cold Weather Operation 61
Compartment, Front. 38-39
Consumer Product Safety 9
Coolant Bottle 105
Coolant, Radiator. 106
Cooling System 104-106
Crankcase Emission Control System 91

D

Demand Drive Fluid 102
Diagnostic Codes. 52-55
Disengaging Active Descent Control 43
Display Units, Standard/Metric 48
Drink Holders 40
Drive Belt Wear/Burn 139
Drivetrain Break-In 57
Driving Downhill. 69
Driving in Reverse. 74
Driving on a Sidehill 68
Driving on Slippery Surfaces 66
Driving Over Obstacles 73
Driving Procedures 62
Driving Through Water 72
Driving Uphill 67
Driving with a Passenger. 64-65

E

Electromagnetic Interference. 91
Electronic Power Steering 40
Emissions Limited Warranty . . 157-158
Engaging 4X4 42
Engaging Active Descent Control . . . 43
Engine Break-In. 57
Engine Fogging 137
Engine Oil 97-99
Engine Stop Switch 31
EPS 40
Equipment Modifications 11
Error Codes, Engine 51
Etiquette, Trail Riding. 60
Exhaust Emission Control System . . 91
Exhaust Exposure 13
Extreme Use Battery 40
Eye Protection 11

F

Fan Shroud (High Lifter). 38
Fluid
- Brake. 34
- Demand Drive. 102
- Engine Oil. 97-99
- Front Gearcase 102
- Rear Gearcase Oil. 103
- Transmission. 100-101

Fluid Change
- Demand Drive. 102
- Engine Oil. 98-99
- Rear Gearcase 103
- Transmission. 101

INDEX

F

Fluid Level
- Brake 34
- Brake (Auxiliary) 36
- Brake Fluid 34
- Coolant (Bottle) 105
- Coolant (Radiator) 106
- Demand Drive 102
- Engine Oil 97
- Rear Gearcase 103
- Transmission 100

Foot Brake, Auxiliary 36
Footwell Removal 109
Front Box (Touring) 39
Front Compartment 38-39
Front Gearcase Fluid 102
Front Rack (1-Up, if equipped) 39
Fuel Recommendations 35
Fuel Safety 13
Fuel Tank Cap 35
Fuse Replacement 114

G

Gasoline Handling 13
Gauge, Code Definitions 52-55
Gauge, Digital/Analog 44-51
Gear Selector 37
Gearcase Oil, Front 102
Gearcase Oil, Rear 103

H

Hand Brake 107
Handlebar Adjustment 131
Hauling Cargo 76-78
Headlight Housing Replacement . . 118
Headlight Lamp Replacement 115
Headlight Switch 31
Helmet 10
High Beam Adjustment 116
High Range Use 126
Hub Tightening 111

I

Idle RPM Adjustment 132
Immersion Maintenance 122
Indicator Lamps 45
Instrument Cluster 44-55

K

Key Switch 31
K-Turn 70-71

L

Lights 115-119
- Headlight Housing Replacement 118
- Headlight Lamp 115
- High Beam, Adjust (Pod) 116
- Low Beam, Adjust (Bumper) . . . 117
- Lower Headlamp Replacement . 119
- Taillight/Brakelight 119

Low Range Use 126
Lower Headlamp Replacement 119
Lubrication Guide 96

M

Maintenance Chart 92-95
Master Cylinder 34
Metric Display 48
Mode Switch 30
Modifications 11

N

Noise Emission Control System 91

O

Oil
- Engine 97-99
- Rear Gearcase 103
- Transmission 100-101

Oil and Filter Change 98-99
Oil Change
- Rear Gearcase 103
- Transmission 101

Oil Level
- Engine 97
- Rear Gearcase 103
- Transmission 100

Oil Recommendations 97
Override Switch 30

P

Parking Brake 35
Parking on an Incline 75
Periodic Maintenance Chart 92-95
Polaris Product List 143
Polishing the Vehicle 135
Power Steering 40
Power Steering Unit (Cleaning) . . . 104
Pre-Ride Checklist 58
Protective Apparel 14
PVT Break-In 57
PVT Drying 126
PVT System 124-126

INDEX

R

Rack, Front (1-Up, if equipped) . . . 39
Rear Gearcase Oil 103
Registration, Warranty. 152
Reverse Operation 74
Reverse Override Switch. 30
Rider Information Center. 46-51
Riding Area 60
Riding Gear 10-11

S

Safe Operation Practices 59
Safety Labels 23-29
Safety Training 9
Safety Warnings. 12-22
Safety, Winch Maintenance. 90
Seat Removal (1-Up Models) 110
Seat Removal (Touring) 110
Severe Use 92
Shock Loading the Winch 88-89
Shroud, Fan (High Lifter) 38
Side Panel Removal. 109
Sidehilling 68
Signal Words 5
Spark Arrester 123
Spark Plug Inspection 120-121
Spark Plug Recommendations. . . . 120
Spark Plugs 120-121
Speedometer 44
Spring Adjustment, Rear Shock . . 131
Starting the Engine 61
Steering Assembly. 104
Storage. 134-138
Storage Box, Front (Touring) 39
Storage Tips. 136-137
Switches
4X4 Switch 30, 41
Engine Stop Switch. 31
Headlight Switch. 31
Main Key Switch 31
Mode/Reverse Override Switch . 30

T

Taillight Lamp Replacement 119
Throttle Body Adjustment 132
Throttle Cable Freeplay 132-133
Throttle Lever 32
Tires 111-112
Front Wheel Hub Tightening . . . 111
Tread Depth 111
Wheel Installation. 112
Wheel Nut Torque 112
Wheel Removal 111
Toe Alignment. 108
Towing Capacities. 78
Towing Loads 78
Trail Etiquette 60
Training 9
Transmission 37
Transmission Oil 100-101
Transporting the ATV 138
Tread Lightly. 60
Turning Around on a Hill 70-71
Turning the Vehicle. 63

V

Vehicle Identification Numbers. 8
Vehicle Immersion 122
VIN 8

W

Warning Symbols 5
Washing the Vehicle 134-135
Wheel Installation 112
Wheel Nut Torque Specifications . . 112
Wheel Removal 111
Winch Cable Care 87
Winch Maintenance/Service Safety. . 90
Winch Operation 82-86
Winch Safety Precautions 79-81
Winch Shock Loading. 88-89

⚠WARNING

Improper vehicle use can result in SEVERE INJURY or DEATH.



ALWAYS USE AN APPROVED HELMET AND PROTECTIVE GEAR FOR DRIVER AND PASSENGER



NEVER USE ON PUBLIC ROADS



NEVER CARRY PASSENGERS ON A 1-UP ATV



NEVER CARRY MORE THAN 1 PASSENGER ON A 2-UP ATV



NEVER USE WITH DRUGS OR ALCOHOL

NEVER operate:

- **without proper ATV training or instruction.**
- **at speeds too fast for your skills or the conditions.**
- **on public roads - a collision can occur with another vehicle.**
- **with a passenger unless passenger seat is securely in place.**

THE OPERATOR MUST ALWAYS:

- **use proper riding techniques to avoid vehicle overturns on hills and rough terrain and in turns.**
- **avoid paved surfaces - pavement may seriously affect handling and control.**
- **reduce speed and use extra caution at all times when carrying a passenger - dismount passenger when conditions require.**
- **make sure passenger reads and understands all safety labels.**

READ OWNER'S MANUAL.
FOLLOW ALL INSTRUCTIONS AND WARNINGS.

POLARIS®

For your nearest Polaris dealer, call 1-800-POLARIS (765-2747) or visit www.polaris.com

Polaris Industries Inc.
2100 Highway 55
Medina, MN 55340

Part No. 9926448 Rev 02
Printed in USA